SHIFTING THE LIMITS

Fronius IG Plus Advanced 3.0-1 / 3.8-1 / 5.0-1 / 6.0-1 / 7.5-1 10.0-1 / 10.0-3 / 11.4-1 / 11.4-3 12.0-3

EN-US

Operating Instructions

Inverter for grid-connected photo-voltaic systems

42,0426,0158,EA 016-04072014

Dear reader,

Introduction

Thank you for the trust you have placed in our company and congratulations on buying this high-quality Fronius product. These instructions will help you familiarize yourself with the product. Reading the instructions carefully will enable you to learn about the many different features it has to offer. This will allow you to take full advantage of all it's features and benefits.

Please also note the safety rules to ensure greater safety when using the product. Careful handling of the product will repay you with years of safe and reliable operation. These are essential prerequisites for excellent results.

IMPORTANT SAFETY INSTRUCTIONS SAVE THESE INSTRUCTIONS

General

These operating instructions contain important instructions for the Fronius IG Plus that must be followed during installation and maintenance of the inverter.

The Fronius IG Plus is designed and tested according to international safety requirements, but as with all electrical and electronic equipment, certain precautions must be observed when installing and/or operating the Fronius IG Plus.
To reduce the risk of personal injury and to ensure the safe installation and operation of the Fronius IG Plus, you must carefully read and follow all instructions and safety instructions in these operating instructions.

Failure to follow these instructions and other relevant safety procedures may result in voiding of the warranty and/or damage to the inverter or other property!

Safety instructions

The following section "Safety instructions" contains various warnings. A Warning describes a hazard to equipment or personnel. It calls attention to a procedure or practice, which, if not correctly performed or adhered to, could result in damage to or destruction of part or all of the Fronius inverter and/or other equipment connected to the Fronius inverter or personal injury.

Electrical installations

All electrical installations must be carried out in accordance with the National Electrical Code, ANSI/NFPA 70, and any other codes and regulations applicable to the installation site.

For installations in Canada, the installations must be done in accordance with applicable Canadian standards.

Contents

Safety rules

Explanation of Safety Instructions

DANGER! Indicates an immediate danger. Death or serious injury may result if appropriate precautions are not taken.

WARNING! Indicates a possibly dangerous situation. Death or serious injury may result if appropriate precautions are not taken.

CAUTION! Indicates a situation where damage or injury could occur. Minor injury or damage to property may result if appropriate precautions are not taken.

NOTE! Indicates the possibility of flawed results and damage to the equipment.

IMPORTANT! Indicates tips for correct operation and other particularly useful information. It does not indicate a potentially damaging or dangerous situation.

If you see any of the symbols depicted in the "Safety Rules," special care is required.

General

The device is manufactured using state-of-the-art technology and according to recognized safety standards. If used incorrectly or misused, however, it can cause
- injury or death to the operator or a third party,
- damage to the device and other material assets belonging to the operator,
- inefficient operation of the device

All persons involved in commissioning, maintaining and servicing the device must
- be suitably qualified,
- have knowledge of and experience in dealing with electrical installations and
- read and follow these operating instructions carefully

The operating instructions must always be at hand wherever the device is being used. In addition to the operating instructions, attention must also be paid to any generally applicable and local regulations regarding accident prevention and environmental protection.

All safety and danger notices on the device
- must be kept in a legible state
- must not be damaged/marked
- must not be removed
- must not be covered, pasted or painted over

For the location of the safety and danger notices on the device, refer to the section headed "General" in the operating instructions for the device.

Before switching on the device, remove any faults that could compromise safety.

Your personal safety is at stake!

Utilization in Accordance with "Intended Purpose"

The device is to be used exclusively for its intended purpose.

Utilization for any other purpose, or in any other manner, shall be deemed to be "not in accordance with the intended purpose." The manufacturer shall not be liable for any damage resulting from such improper use.

Utilization in accordance with the "intended purpose" also includes
- carefully reading and obeying all the instructions and all the safety and danger notices in the operating instructions
- performing all stipulated inspection and servicing work
- installation as specified in the operating instructions

The following guidelines should also be applied where relevant:
- Regulations of the utility regarding energy fed into the grid
- Instructions from the solar module manufacturer

Environmental Conditions

Operation or storage of the device outside the stipulated area will be deemed as "not in accordance with the intended purpose." The manufacturer is not responsible for any damages resulting from unintended use.

For exact information on permitted environmental conditions, please refer to the "Technical data" in the operating instructions.

Qualified Service Engineers

The servicing information contained in these operating instructions is intended only for the use of qualified service engineers. An electric shock can be fatal. Do not perform any actions other than those described in the documentation. This also applies to those who may be qualified.

All cables and leads must be secured, undamaged, insulated and adequately dimensioned. Loose connections, scorched, damaged or inadequately dimensioned cables and leads must be immediately repaired by authorized personnel.

Maintenance and repair work must only be carried out by authorized personnel.

It is impossible to guarantee that externally procured parts are designed and manufactured to meet the demands made on them, or that they satisfy safety requirements. Use only original replacement parts (also applies to standard parts).

Do not carry out any modifications, alterations, etc. without the manufacturer's consent.

Components that are not in perfect condition must be changed immediately.

Safety Measures at the Installation Location

When installing devices with openings for cooling air, ensure that the cooling air can enter and exit unhindered through the vents. Only operate the device in accordance with the degree of protection shown on the rating plate.

Data Regarding Noise Emission Values

The inverter generates a maximum sound power level of < 80 dB(A) (ref. 1 pW) when operating under full load in accordance with IEC 62109-1:2010.

The device is cooled as quietly as possible with the aid of an electronic temperature control system, and depends on the amount of converted power, the ambient temperature, the level of soiling of the device, etc.

It is not possible to provide a workplace-related emission value for this device, because the actual sound pressure level is heavily influenced by the installation situation, the power quality, the surrounding walls and the properties of the room in general.

EMC Device Classifications

Devices in emission class A:
- Are only designed for use in industrial settings
- Can cause line-bound and radiated interference in other areas

Devices in emission class B:
- Satisfy the emissions criteria for residential and industrial areas. This is also true for residential areas in which the energy is supplied from the public low-voltage grid.

EMC device classification as per the rating plate or technical data.

EMC Measures

In certain cases, even though a device complies with the standard limit values for emissions, it may affect the application area for which it was designed (e.g., when there is sensitive equipment at the same location, or if the site where the device is installed is close to either radio or television receivers). If this is the case, then the operator is obliged to take appropriate action to rectify the situation.

Grid Connection

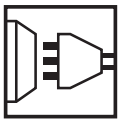

High-performance devices (> 16 A) can affect the voltage quality of the grid because of a high output current in the main supply.

This may affect a number of types of device in terms of:
- connection restrictions
- criteria with regard to maximum permissible mains impedance *)
- criteria with regard to minimum short-circuit power requirement *)

*) at the interface with the public grid

see Technical Data

In this case, the operator or the person using the device should check whether or not the device is allowed to be connected, where appropriate through discussion with the power supply company.

Electrical Installations

Electrical installations must only be carried out according to relevant national and local standards and regulations.

Protective Measures against ESD

Danger of damage to electrical components from electrical discharge. Suitable measures should be taken to protect against ESD when replacing and installing components.

Safety measures in normal operation

Only operate the device when all safety devices are fully functional. If the safety devices are not fully functional, there is a risk of

- injury or death to the operator or a third party
- damage to the device and other material assets belonging to the operating company
- inefficient operation of the device

Safety equipment that is not fully functional must be repaired by an authorized specialist before the device is turned on.

Never bypass or disable safety devices.

Safety symbols

Devices marked with the CSA test mark satisfy the requirements of the relevant standards for Canada and the USA.

Disposal

Do not dispose of this device with normal domestic waste! To comply with the European Directive 2002/96/EC on Waste Electrical and Electronic Equipment and its implementation as national law, electrical equipment that has reached the end of its life must be collected separately and returned to an approved recycling facility. Any device that you no longer require must be returned to your dealer, or you must locate the approved collection and recycling facilities in your area. Ignoring this European Directive may have potentially adverse affects on the environment and your health!

Backup

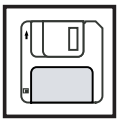

The user is responsible for backing up any changes made to the factory settings. The manufacturer accepts no liability for any deleted personal settings.

Copyright

Protection of Persons and Equipment

Safety

WARNING! An electric shock can be fatal. Danger from grid voltage and DC voltage from solar modules.
- The connection area should only be opened by a licensed electrician.
- The separate power stage set area should only be disconnected from the connection area after first being disconnected from the grid power.
- The separate power stage set area should only be opened by Fronius-trained service personnel.

Never work with live wires! Prior to all connection work, make sure that the AC and DC wires are not charged.

WARNING! If the equipment is used or tasks are carried out incorrectly, serious injury or damage may result. Only qualified personnel are authorized to install your inverter and only within the scope of the respective technical regulations. It is essential that you read the "Safety regulations" chapter before commissioning the equipment or carrying out maintenance work.

Protection of Persons and Equipment

The design and function of the inverter offer a maximum level of safety, both during installation as well as operation.

The inverter provides operator and equipment protection through:
a) galvanic isolation
b) monitoring the grid

Galvanic isolation

The inverter is equipped with a high frequency transformer that ensures galvanic isolation between the DC side and the grid, thus ensuring the highest possible safety.

Monitoring the Grid

Whenever conditions in the electric grid are inconsistent with standard conditions (for example, grid switch-off, interruption), the inverter will immediately stop operating and interrupt the supply of power into the grid.

Grid monitoring is carried out using:
- Voltage monitoring
- Frequency monitoring
- Monitoring islanding conditions

Information on "Field Adjustable Trip Points" and "Advanced Grid Features"

The inverter is equipped with field adjustable trip points and advanced grid features. For further information, please contact Fronius technical support at the following e-mail address: pv-us-support@fronius.com.

FCC compliance

This device complies with Part 15 of the FCC Rules. Operation is subject to the following conditions:
(1) This device may not cause harmful interference, and
(2) This device must accept any interference received, including interference that may cause undesired operation.

Ground fault detector / interrupter

The inverter is equipped with a ground fault detection and interruption (GFDI) circuit as required by UL 1741 and the National Electrical code.
Depending on the system configuration either the PV array's negative or positive conductor is connected to the grounding system in the inverter. If a ground fault occurs in the DC wiring, the inverter disconnects from the grid.

Arc detection / interruption

The inverter is equipped with an integrated arc fault circuit interrupter, that detects and extinguishes serial arcs.

For example, a serial arc can occure after following errors or situationes:
- Inproperly connected DC plugs
- Defective connection sockets of solar modules
- High-resistance brazed joints between the cells of a solar module
- Cables connected improperly to the input terminals of an inverter
- Defective DC cable, enabling a connection to ground

If an arc is detected, the inverter shuts off and feed-in power into the grid is interrupted. A state code is shown on the display.
The state code shown at the display must be reset manually before the operation of feeding power into the grid can be resumed.

By shuting power off the serial arc is extinguished.

Standards and regulations

Your inverter complies with the requirements for the following standards "Inverters, converters and controllers for use in independent power systems":
- UL1741-2005
- IEEE 1547-2003
- IEEE 1547.1
- ANSI / IEEE C62.41
- C22.2 No. 107.1-01 (Sep. 2001)
- UL1699B

The ground-fault detection and interruption is in compliance with NEC 690 building code requirements.

Declaration of conformity

Relevant declarations of conformity can be found in the appendix to these operating instructions.

Warning notice on the wall bracket

The wall bracket contains a warning notice regarding the installation of several inverters next to each other. This warning notice warns against incorrect installation and must not be removed or painted over. Incorrect installation voids the warranty, property damage can result.

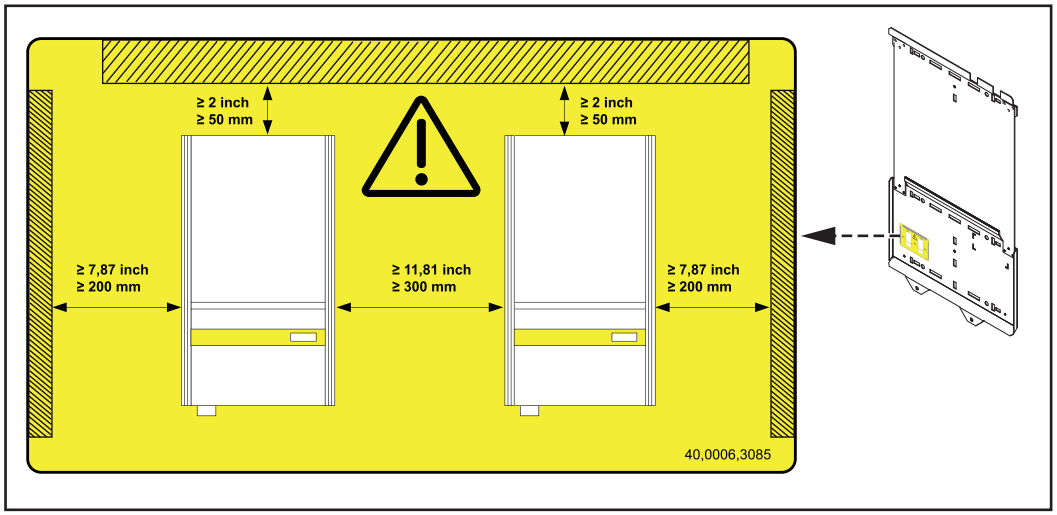

The spacing information listed in the warning notice from the wall/ceiling to the inverter and from inverter to inverter must be observed when installing several inverters next to each other.

Warning notices affixed to the device

The inverter contains warning notices and safety symbols. These warning notices and safety symbols must NOT be removed, painted over or covered. The notices and symbols warn against operating the equipment incorrectly, as this may result in serious injury and damage.

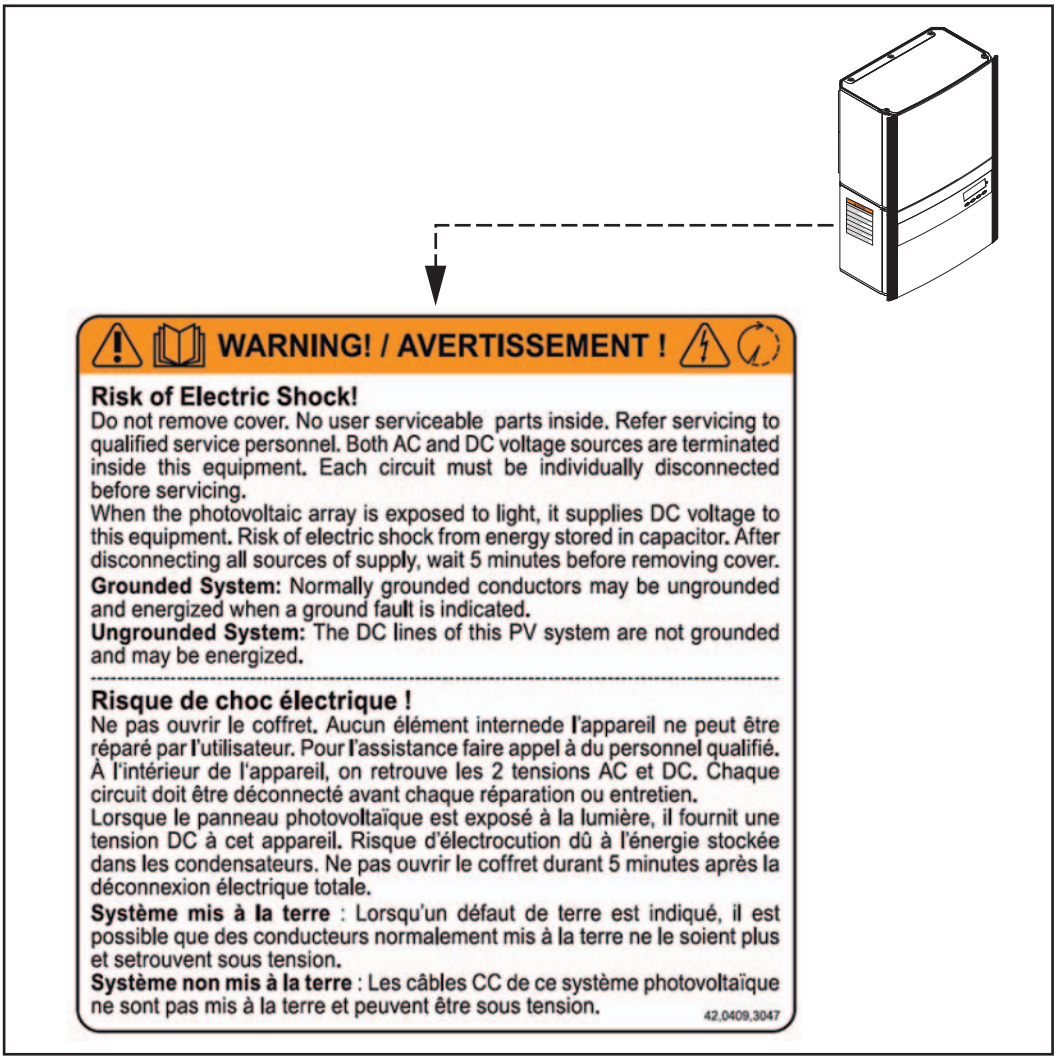

The inverter in the PV system

General

The solar inverter is the highly complex link between the solar modules and the public grid.

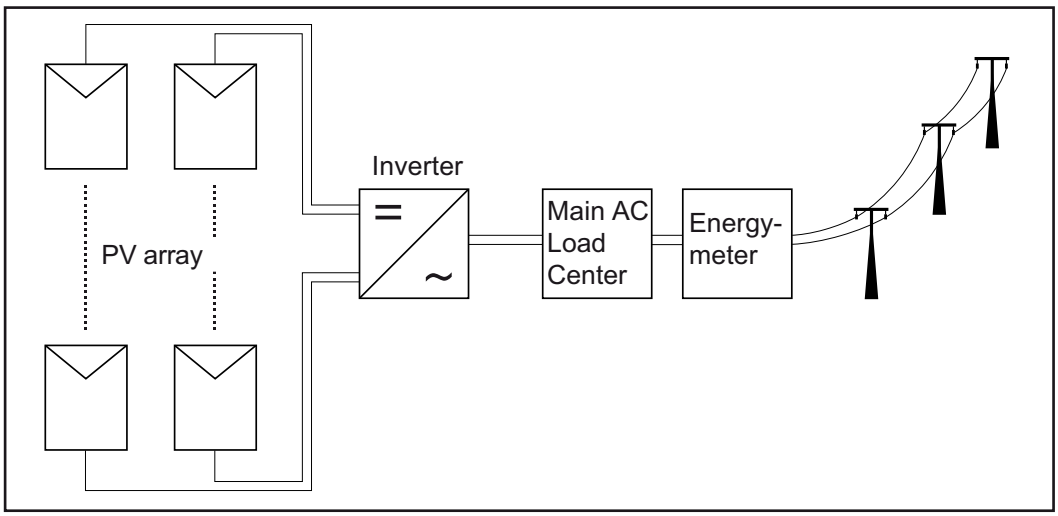

Tasks

The main tasks of the inverter include:
- Converting DC to AC current
- Fully automatic operational management
- Display function and data communication

Converting DC to AC Current

The inverter transforms the direct current generated by the solar modules into alternating current. This alternating current is fed into your home system or into the public grid and synchronized with the voltage that is used there.

IMPORTANT! The inverter has been designed exclusively for use in grid-connected photovoltaic systems. It cannot generate electric power independently of the grid.

Fully automatic operation management

The inverter is fully automatic. Starting at sunrise, as soon as the solar modules generate enough energy, the automatic control unit starts monitoring grid voltage and frequency. As soon as there is a sufficient level of irradiance, your solar inverter starts feeding energy into the grid.

The control system of the inverter ensures that the maximum possible power output is drawn from the solar modules at all times.
This function is called MPPT (Maximum Power Point Tracking).

As dusk starts and there is no longer sufficient energy available to feed power into the grid, the inverter shuts down the grid connection completely and stops operating. All settings and recorded data are saved.

Display function and data communication

The display on the inverter is the interface between the inverter and the operator. The design of the display is geared towards simple operation and making system data available as long as the inverter operates.

The inverter is equipped with a basic logging function to monitor minimum and maximum data on a daily and a cumulative basis. These values are shown on the display.

A wide range of data communication products allows for many possibilities of recording and viewing data.

Data Communications Components

The inverter is designed for various data communications components, e.g.:
- Data communications components that enable the inverter to communicate with external components as well as other inverters
- Datalogger and modem interface as well as an Ethernet/Internet connection (for using a PC to record and manage data from your photovoltaic system)
- Various large-format displays
- Fronius Personal Display
- Actuators (e.g.: relays, alarms)
- Interface cards

Data communications components are available as plug-in cards.

Forced Ventilation

The inverter's temperature-controlled, variable-speed fan with ball-bearing support provides:
- optimal inverter cooling
- efficiency increases
- cooler components, thus improving service life
- least possible energy consumption and lowest possible noise level
- weight reduction due to a reduction of the cooling element surface

Power derating

Should there be insufficient heat dissipation in spite of the fan operating at maximum speed (for example, inadequate heat transfer away from the heat sinks), the power will be derated to protect the inverter when the ambient temperature reaches approx. 40 °C and above.

Derating the power reduces the output of the inverter for a short period sufficient to ensure that the temperature will not exceed the permissible limit.
Your inverter will remain ready for operation as long as possible without any interruption.

Installing and connecting inverter

Safety

WARNING! An electric shock can be fatal. Danger from grid voltage and DC voltage from solar modules.

- The connection area should only be opened by a licensed electrician.
- The separate power stage set area should only be disconnected from the connection area after first being disconnected from the grid power.
- The separate power stage set area should only be opened by Fronius-trained service personnel.

Never work with live wires! Prior to all connection work, make sure that the AC and DC wires are not charged.

WARNING! If the equipment is used or tasks are carried out incorrectly, serious injury or damage may result. Only qualified personnel are authorized to install your inverter and only within the scope of the respective technical regulations. It is essential that you read the "Safety regulations" chapter before commissioning the equipment or carrying out maintenance work.

Inverter Construction

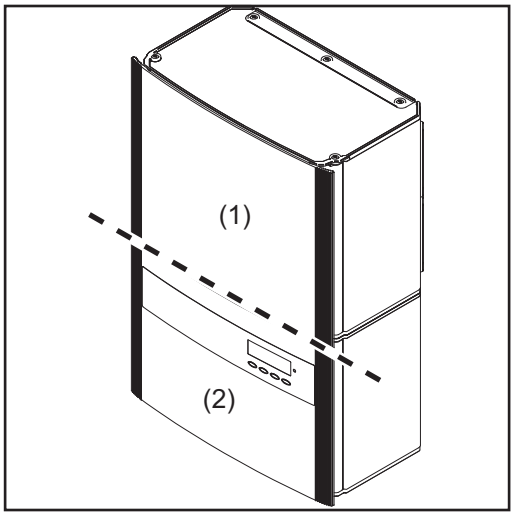

The power stage set and the connection area are separated from each other for delivery.

(1) Power stage set(s)

(2) Connection area

Connection diagram

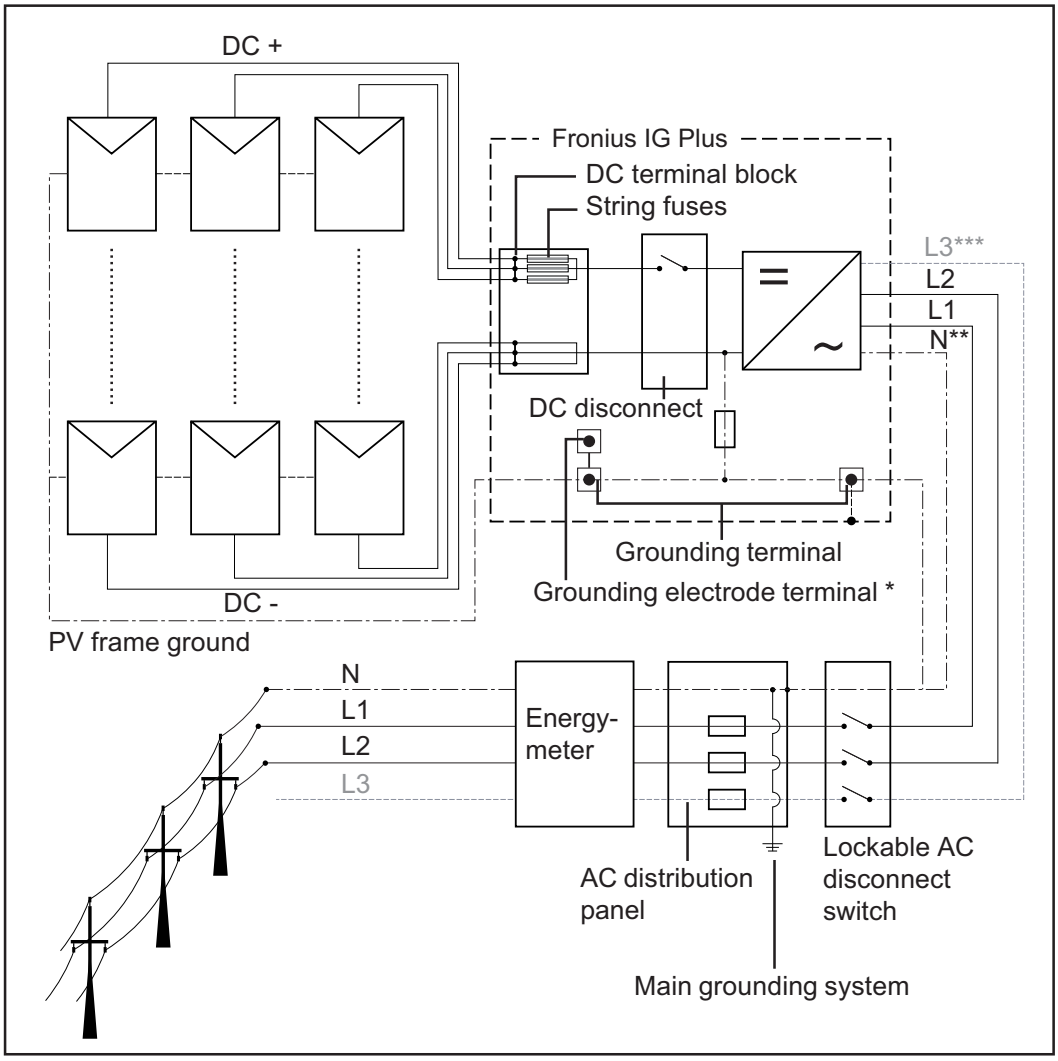

* may be required by local authorities

** may be required depending on grid configuration

*** depending on inverter type

Overview

‘Installing and connecting inverter’ contains the following sections:

- Connection options
- Knockouts
- Choosing the location
- Inverter installation
- Connecting the inverter to the public grid (AC)
- Connecting solar module strings to the inverter (DC)
- Attaching power stage sets and closing the inverter

Connection options

Connection options

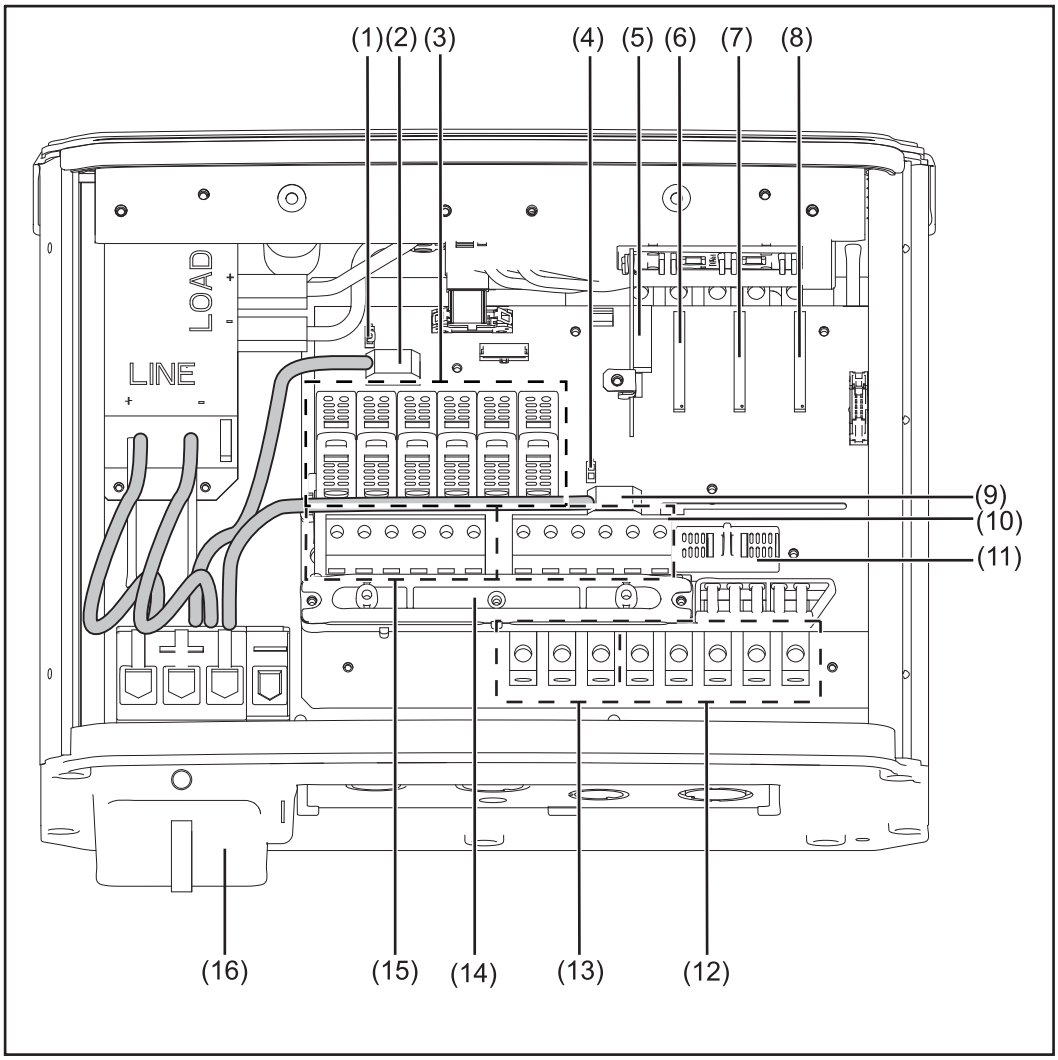

Item	Description
(1)	Jumper slot SMON
(2)	DC+ main switch wire
(3)	6 x fuse holder with fuse cover, for stringfuses (comes as standard with 6 metal slugs inserted)
(4)	Jumper slot SMOFF
(5)	IG Brain plug-in card
(6)	Open card slot for an option card
(7)	Fronius Com Card plug-in card
(8)	Fronius Arc Blocker plug-in card
(9)	DC- main switch wire
(10)	6 negative DC terminals (DC-)
(11)	Fuse holder with fuse cover, for GFDI-fuse
(12)	AC-side terminals
(13)	3 x grounding terminals
(14)	Strain relief for solar module strings

Item	Description
(15)	6 positive DC terminals (DC+)
(16)	DC main switch

‘Fronius Arc Blocker‘ plug-in card

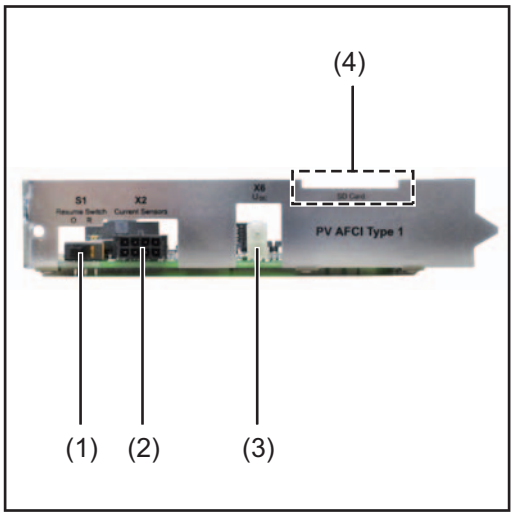

Item	Description
(1)	Switch “Resume“ to reset the Fronius Arc Blocker plug-in card after a detected arc
(2)	Current sensor connection
(3)	DC voltage measurement
(4)	not available

Knockouts

General

The inverter contains several knockouts of different sizes. When knocked out, the openings are used for the inputs of various wires.

Knockouts for wire inputs

Knockouts on the left-hand side

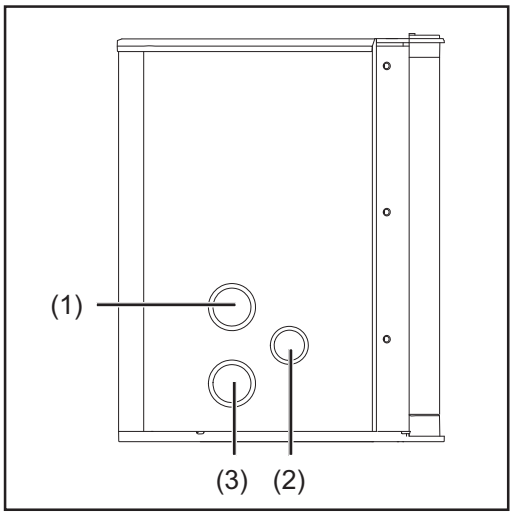

Knockouts on the right-hand side

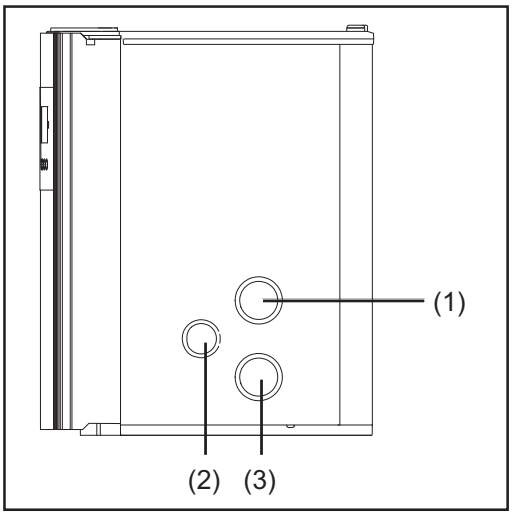

Knockouts on the underside and on the backside

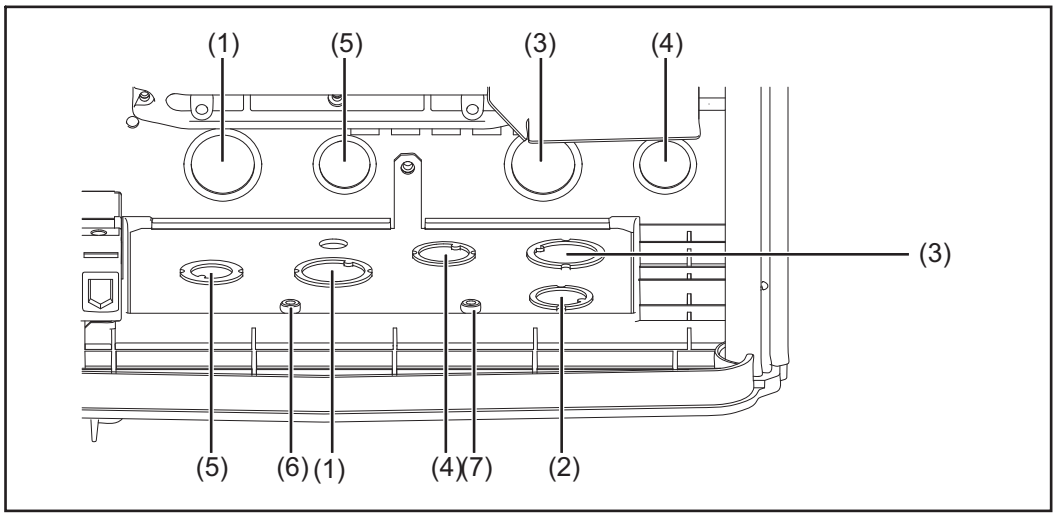

Item	Description
(1)	Knockout, diameter 3/4 in. / 1 in. e.g., for DC wire, surge arrester
(2)	Knockout, diameter 1/2 in. / 3/4 in. only for data wires
(3)	Knockout, diameter 3/4 in. / 1 in. e.g., for AC wire, surge arrester
(4)	Knockout, diameter 1/2 in. / 3/4 in. e.g., for AC wire, surge arrester
(5)	Knockout, diameter 1/2 in. / 3/4 in. e.g., for DC wire, surge arrester

Item	Description
(6)	FTX 25 fixing screw
(7)	FTX 25 fixing screw

NOTE! When using back wire inputs:
- seal enclosure as per NEMA 3R before outside operationn

NOTE!
- The larger knockouts should only be removed from the outside in.
- The smaller knockouts should be removed from the inside out.
- Only remove the number of knockouts required for the available wire inputs.

CAUTION! Danger of damaging the plastic base when removing the knockouts on the bottom.
- Before removing, remove the 3 fixing screws (6) and (7)
- Remove the metal insert from the plastic base
- Remove the required knockouts
- Replace the metal insert into the plastic base
- Secure the metal insert using the 3 fixing screws (6) and (7)

Choosing the Location

Choosing the location in general

Please note the following criteria when choosing a location for the inverter:

Only vertical installation
Max. ambient temperatures: -13 °F / +131 °F (-25 °C / +55 °C)
Relative humidity: 0 - 95 %
For use at altitudes above sea level: up to 6561 ft. (2000 m)

- Keep a minimum distance of 8 in. (20 cm) between each inverter or anything to the right or left of the inverters such as walls or DC and AC disconnects.
  For optimal airflow and cooling efficiency in locations with temperatures exceeding 104 °F (40 °C), the manufacturer recommends a distance of 10 - 12 in. (25 - 30 cm).
- When installing more than one inverter, keep a distance of 12 in. (30 cm) between each inverter. In locations with temperatures exceeding 104 °F (40 °C), more than 12 inches is desirable.

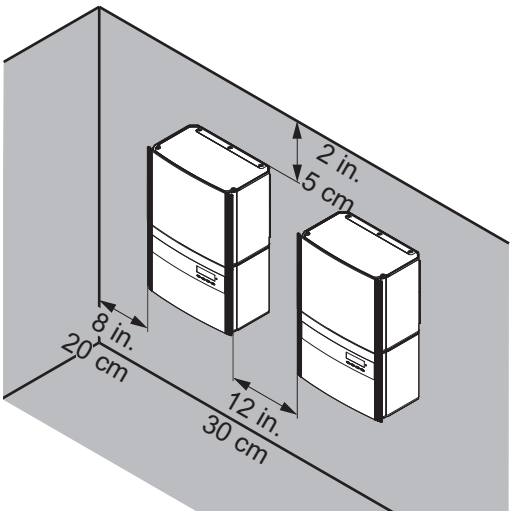

Keep a minimum distance under the inverter corresponding to the ‘NEC 110.26 for code compliant disconnect location‘. If the DC disconnect is to be code compliant, it must be readily accessible (NEC 690.14 (B) (1)).
The air flow direction within the inverter is from right to left (cold air intake on right, hot air exit on left).
When installing the inverter in a switch panel cabinet (or similar closed environment), it is necessary to make sure that the hot air that develops will be discharged by forced ventilation.
The inverter is designed for installation both indoors and outdoors.

Choosing a Location for Inside Installation

During certain operation phases the inverter may produce a slight noise. For this reason it should not be installed in an occupied living area.

Do not install the inverter in:
- areas with large amounts of dust
- areas with large amounts of conducting dust particles (e.g., iron filings)
- areas with corrosive gases, acids or salts
- areas where there is an increased risk of accidents, e.g., from farm animals (horses, cattle, sheep, pigs, etc.)
- stables or adjoining areas
- storage areas for hay, straw, chaff, animal feed, fertilizers, etc.
- storage or processing areas for fruit, vegetables or winegrowing products
- areas used in the preparation of grain, green fodder or animal feeds
- greenhouses

Choosing a location for outdoor installation

NEMA 3R protection means that the inverter is not susceptible to water spray from any direction.
However, the manufacturer recommends, if possible, that the inverter not be exposed to direct moisture or to a direct water jet (e.g., from sprinklers).

In order to protect the display, the inverter should not be exposed to direct sunlight. Ideally, the inverter should be installed in a protected location, e.g., near the solar modules or under a roof overhang.

Do not install the inverter:
- where it can be exposed to ammonia, corrosive gasses, acids or salts (e.g., fertilizer storage areas, vent openings of livestock stables, chemical plants, tanneries)

Installing the inverter

General

IMPORTANT! Depending on the surface, different wall anchors and screws may be required for installing the wall bracket. These wall anchors and screws are not part of the scope of delivery for the inverter. The installer is responsible for selecting the proper wall anchors and screws.

NOTE! The inverter is designed only for a vertical installation position.

Assembling the wall bracket

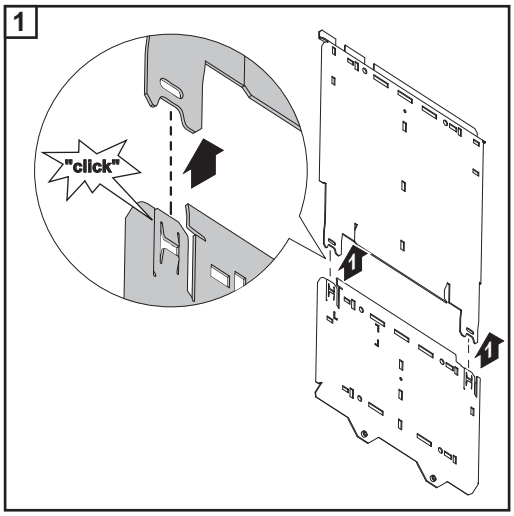

Recommended screws for wall bracket assembly

In most cases, you should use 1/4 in. or 5/16 in. stainless steel or aluminum screws capable of supporting:

- 31 lbs. for Fronius IG Plus 3.0-1 / 3.8-1
- 57 lbs. for Fronius IG Plus 5.0-1 / 6.0-1 / 7.5-1
- 82 lbs. for Fronius IG Plus 10.0-1 / 10.0-3 / 11.4-1 / 11.4-3 / 12.0-3

Attaching the wall bracket - mounting height

IMPORTANT! Keep a minimum distance under the inverter corresponding to the ‘NEC 110.26 for code compliant disconnect location. If the DC disconnect is to be code compliant, it must be readily accessible (NEC 690.14 (B) (1)).
The DC disconnect is in the lower left part of the inverter. Also, the cut out segment marked (*) in the following drawings represents the placement of the inverter display. Use this to ensure a comfortable display height for easy reading.

Attaching the wall bracket to a concrete or brick wall

IMPORTANT! The cut out segment marked (*) represents the placement of the inverter display. Use this to ensure a comfortable display height for easy reading.

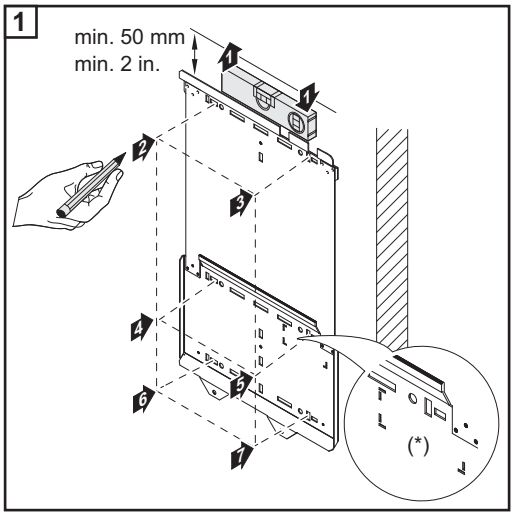

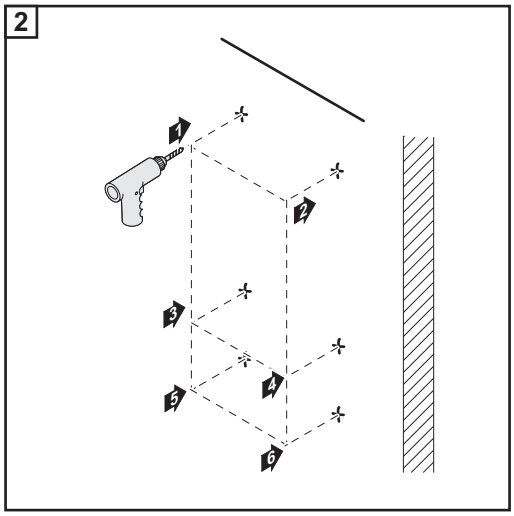

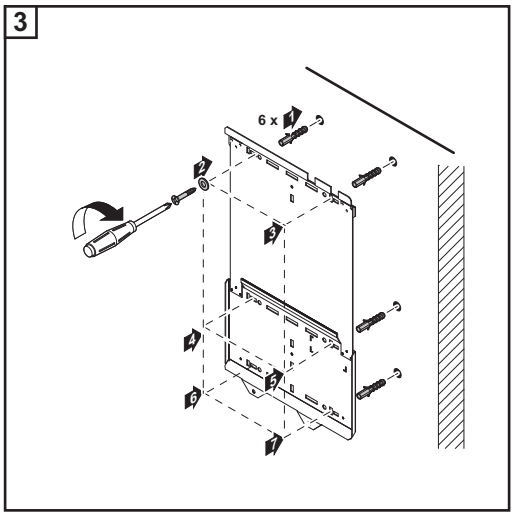

Attaching the wall bracket to a wooden wall

IMPORTANT! The cut out segment marked (*) represents the placement of the inverter display. Use this to ensure a comfortable display height for easy reading.

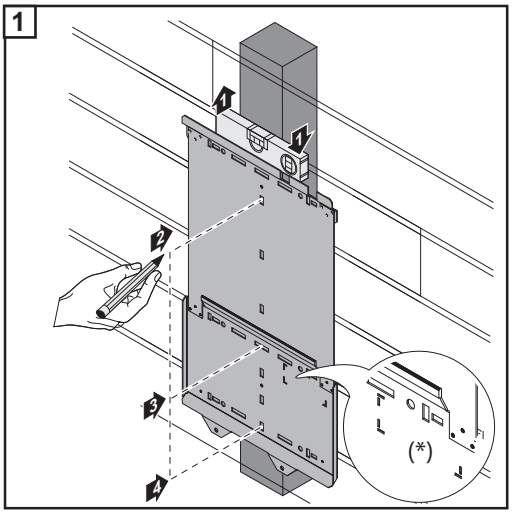

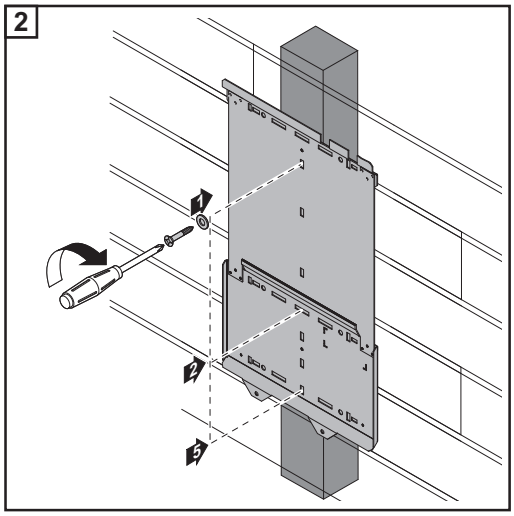

Installing a wall bracket on an individual column outdoors

When an inverter is installed outdoors on an individual column or on an upright metal carrier, the included weather shield must be installed along with the wall bracket.

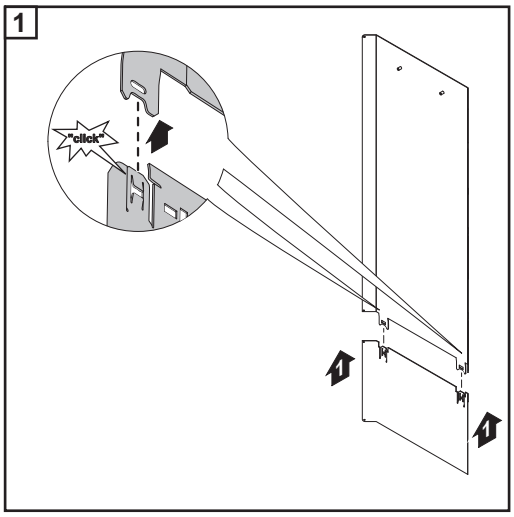

NOTE! When hanging the wall bracket on to the weather shield bolts, make sure that:

- the wall bracket hangs upright
- the wall bracket hangs evenly from both bolts

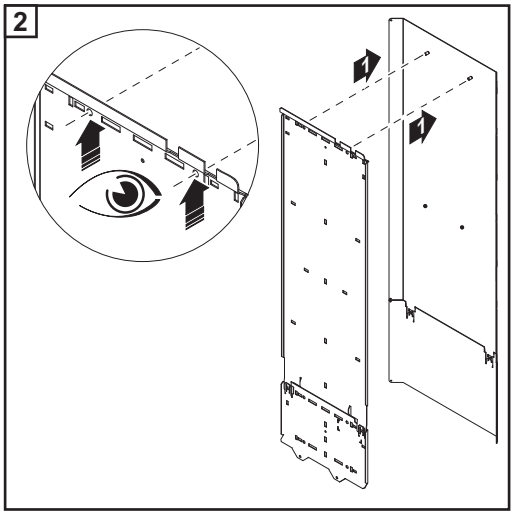

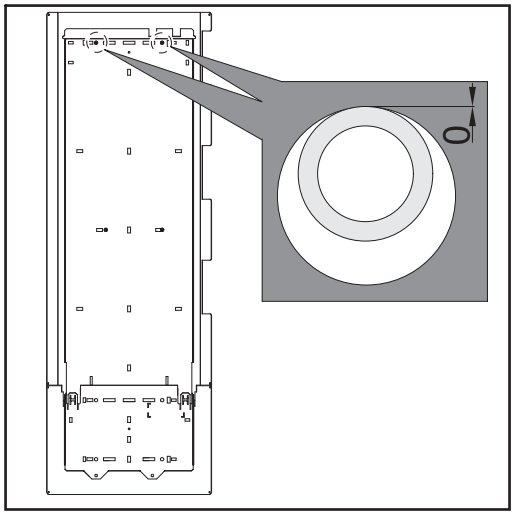

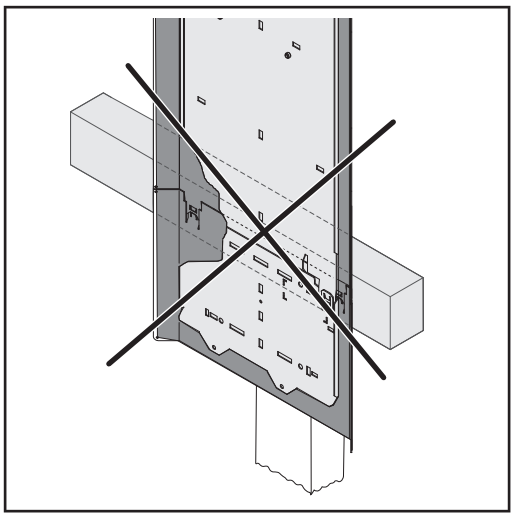

Only applies to the two-part weather shield: when positioning the two-part weather shield and wall bracket, make sure that there is no cross beam or wall behind the joint of the two weather shield parts.

IMPORTANT! The cut out segment marked (*) represents the placement of the inverter display. Use this to ensure a comfortable display height for easy reading.

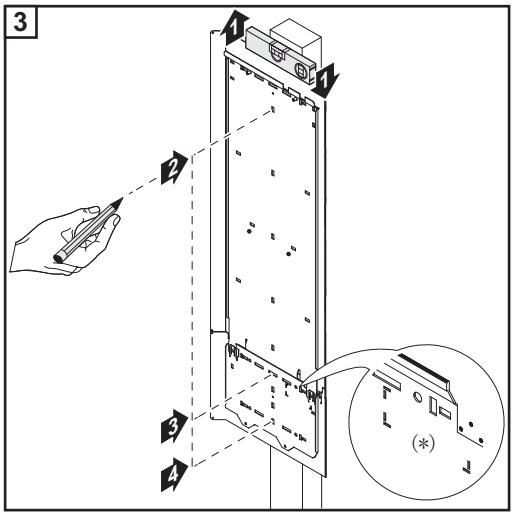

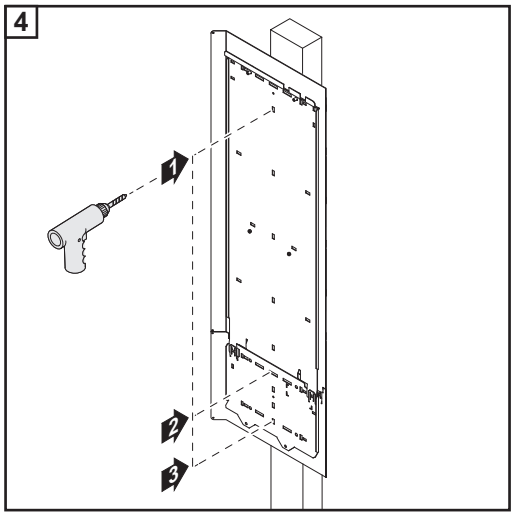

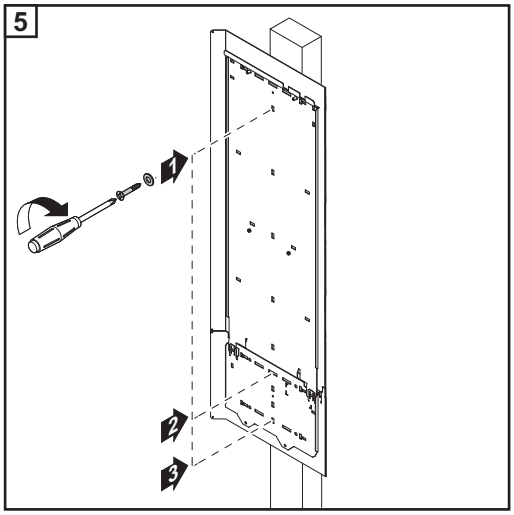

Attaching the wall bracket to a metal carrier

IMPORTANT! The cut out segment marked (*) represents the placement of the inverter display. Use this to ensure a comfortable display height for easy reading.

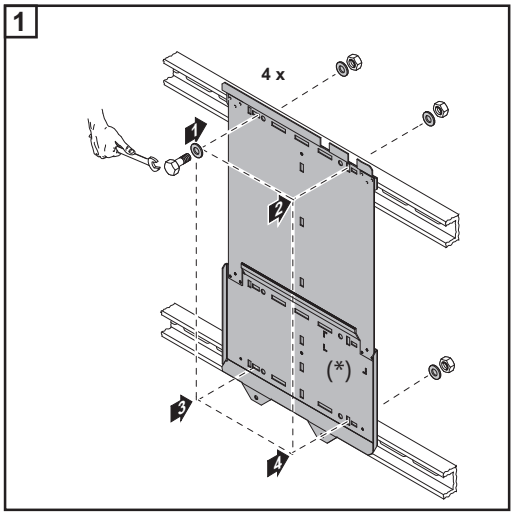

NOTE! When installing using a metal carrier, the inverter should not be exposed to rainwater or water spray at the back. Ensure proper rainwater or spray water protection.

Lifting the inverter

Fronius recommends using a commercially-available vacuum lifting pad for flat surfaces to lift the connection area and power stage set.

IMPORTANT!
- The vacuum lifting pads must be designed for the weight of the connection area and power stage set.
- Follow all safety instructions from the vacuum lifting pad manufacturer.
- Vacuum lifting pads are not part of the scope of delivery for the inverter.

Weight information for the connection area and power stage set:

Inverter	Connection area	Power stage set
Fronius IG Plus A 3.0-1 UNI	24 lbs.	31 lbs.
Fronius IG Plus A 3.8-1 UNI	24 lbs.	31 lbs.
Fronius IG Plus A 5.0-1 UNI	26 lbs.	57 lbs.
Fronius IG Plus A 6.0-1 UNI	26 lbs.	57 lbs.
Fronius IG Plus A 7.5-1 UNI	26 lbs.	57 lbs.
Fronius IG Plus A 10.0-1 UNI	26 lbs.	82 lbs.
Fronius IG Plus A 10.0-3 Delta	26 lbs.	82 lbs.
Fronius IG Plus A 11.4-1 UNI	26 lbs.	82 lbs.
Fronius IG Plus A 11.4-3 Delta	26 lbs.	82 lbs.
Fronius IG Plus A 12.0-3 WYE277	26 lbs.	82 lbs.

Inverter installation

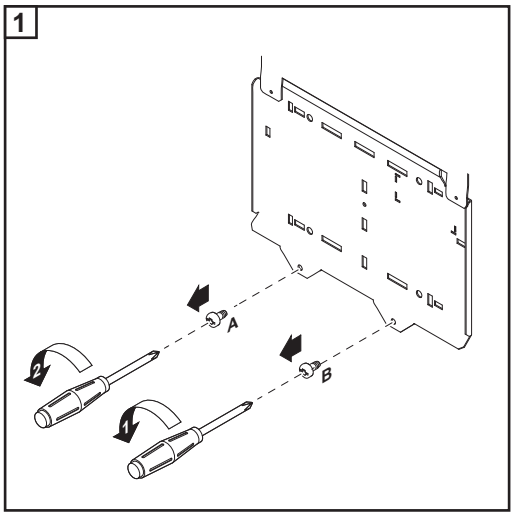

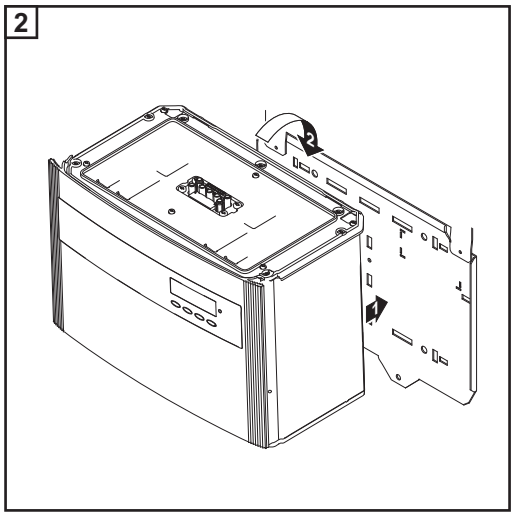

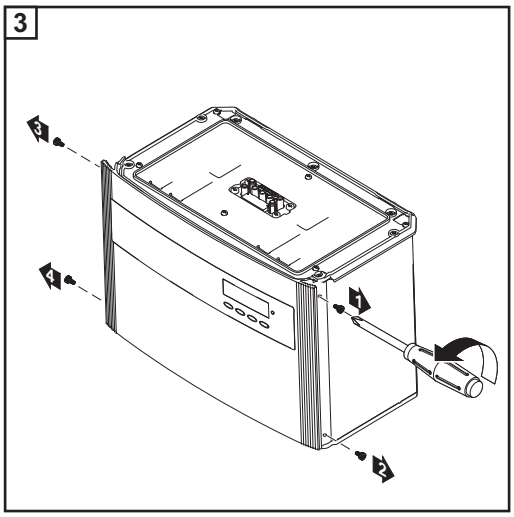

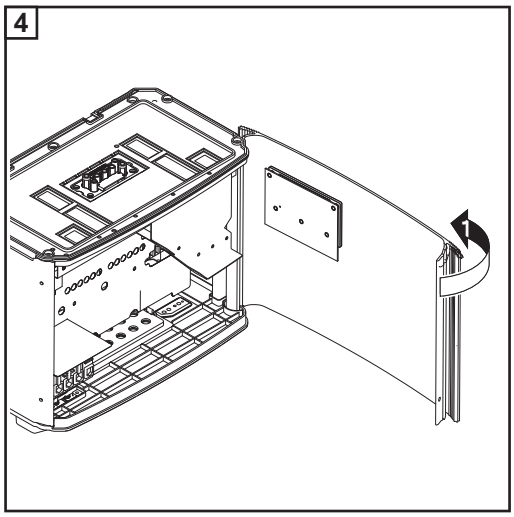

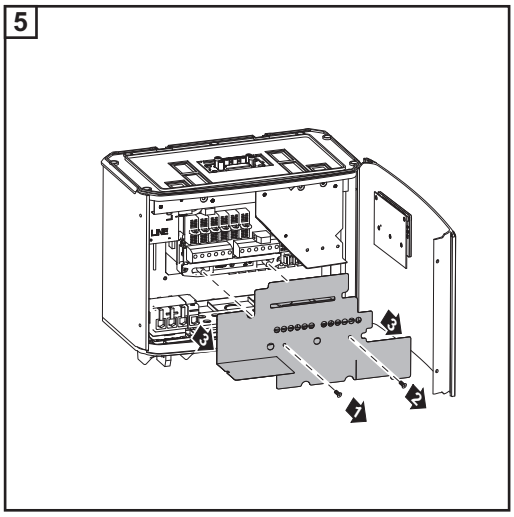

CAUTION! Danger of injury by falling equipment. Attach the connection area of the inverter to the wall bracket using the 2 screws removed from the wall bracket in step 1.

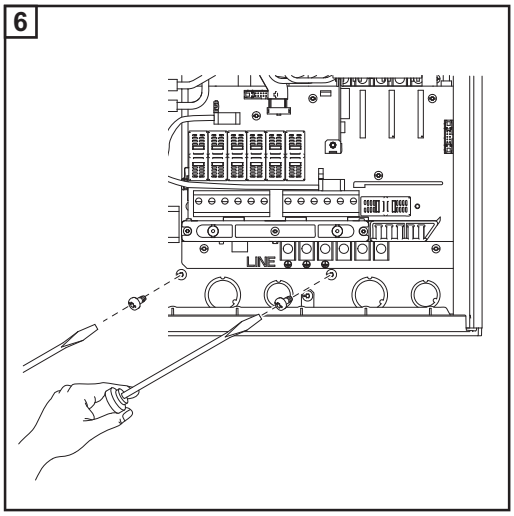

Installation of several inverters

Several inverters can be easily installed and connected next to each other using the side knockouts on the inverter, e.g.:

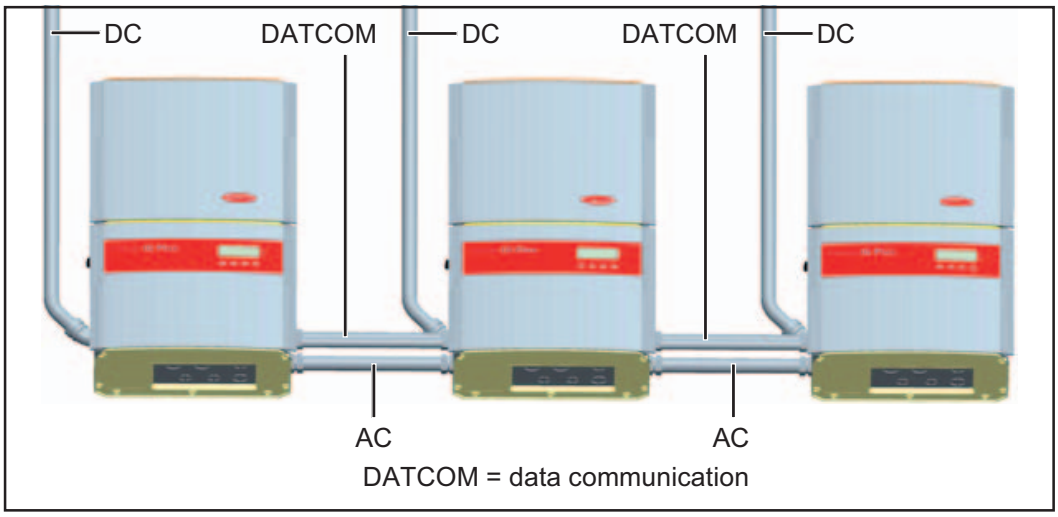

NOTE! All electrical installations must be carried out in accordance with the National Electrical Code, ANSI/NFPA 70, and any other codes and regulations applicable to the installation site.

For installations in Canada, the installations must be done in accordance with applicable Canadian standards.

Connecting the inverter to the public grid (AC)

Overview of available grids

Inverters can be connected to the following grids:

Grid	Inverter
208 V Delta, No neutral conductor 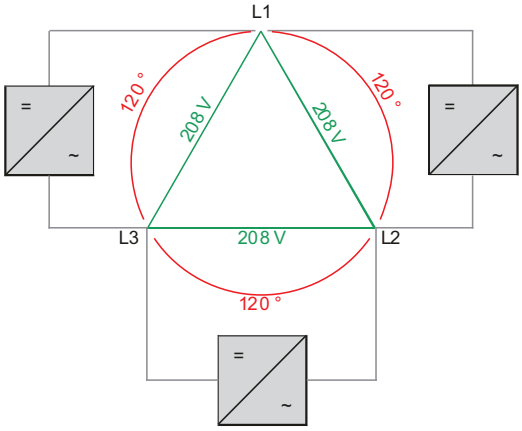 	Fronius IG Plus 3.0-1 Fronius IG Plus 3.8-1 Fronius IG Plus 5.0-1 Fronius IG Plus 6.0-1 Fronius IG Plus 7.5-1 Fronius IG Plus 10.0-1 Fronius IG Plus 10.0-3 Fronius IG Plus 11.4-1 Fronius IG Plus 11.4-3
208 V Delta: 120 V WYE, Neutral conductor available 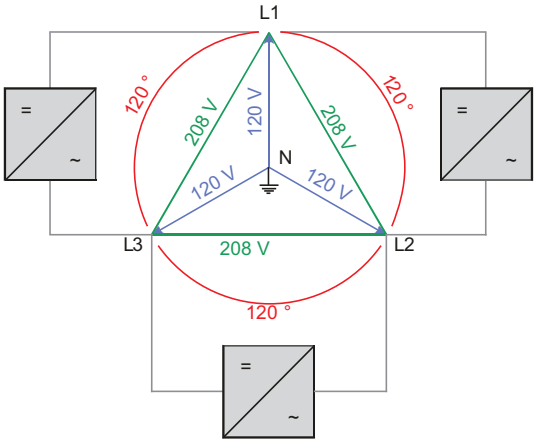 	Fronius IG Plus 3.0-1 Fronius IG Plus 3.8-1 Fronius IG Plus 5.0-1 Fronius IG Plus 6.0-1 Fronius IG Plus 7.5-1 Fronius IG Plus 10.0-1 Gronius IG Plus 10.0-3 Fronius IG Plus 11.4-1 Fronius IG Plus 11.4-3
240 V Delta, No neutral conductor 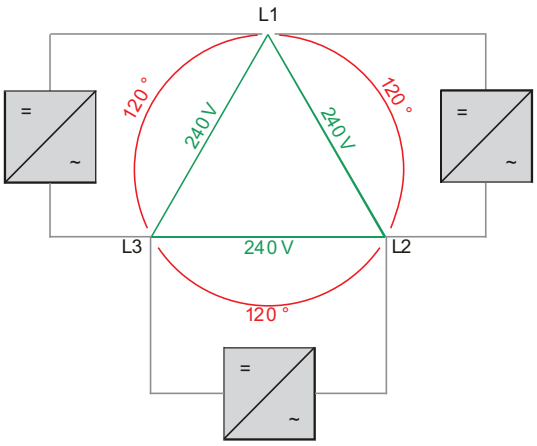 	Fronius IG Plus 3.0-1 Fronius IG Plus 3.8-1 Fronius IG Plus 5.0-1 Fronius IG Plus 6.0-1 Fronius IG Plus 7.5-1 Fronius IG Plus 10.0-1 Fronius IG Plus 10.0-3 Fronius IG Plus 11.4-1 Fronius IG Plus 11.4-3

Grid	Inverter
240 V: 120 V Stinger, Neutral conductor available 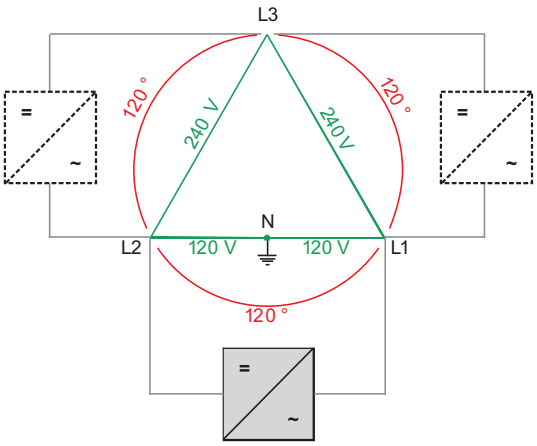 	Fronius IG Plus 3.0-1 Fronius IG Plus 3.8-1 Fronius IG Plus 5.0-1 Fronius IG Plus 6.0-1 Fronius IG Plus 7.5-1 Fronius IG Plus 10.0-1 Fronius IG Plus 11.4-1
240 V: 120 V Split phase, Neutral conductor available 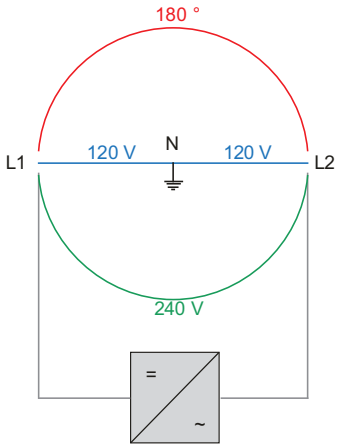 	Fronius IG Plus 3.0-1 Fronius IG Plus 3.8-1 Fronius IG Plus 5.0-1 Fronius IG Plus 6.0-1 Fronius IG Plus 7.5-1 Fronius IG Plus 10.0-1 Fronius IG Plus 11.4-1
480 V Delta: 277 V WYE, Neutral conductor available, is used as an active conductor 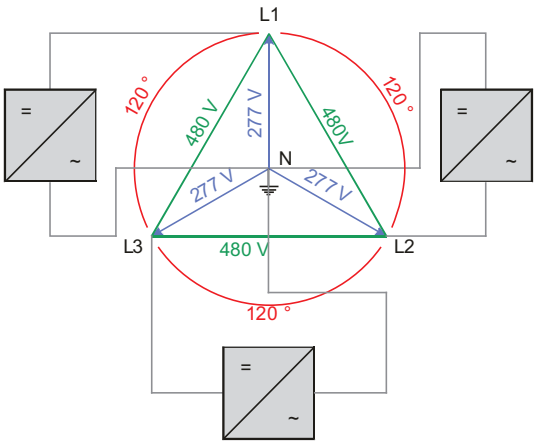 	Fronius IG Plus 3.0-1 Fronius IG Plus 3.8-1 Fronius IG Plus 5.0-1 Fronius IG Plus 6.0-1 Fronius IG Plus 7.5-1 Fronius IG Plus 10.0-1 Fronius IG Plus 11.4-1 Fronius IG Plus 12.0-3

Grid	Inverter
480 V Delta 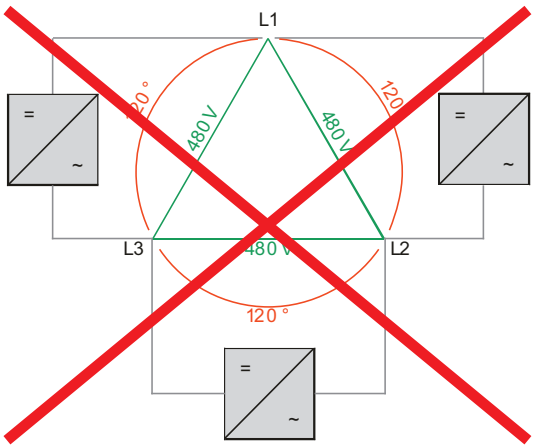 	**NOTE!** Do not connect Fronius IG Plus inverters to the 480 V Delta grid.

Monitoring the Grid

IMPORTANT! The resistance in the leads to the AC-side connection terminals must be as low as possible for optimal functioning of grid monitoring.

Systems with more than one inverter

For larger photovoltaic systems, it is possible to connect several inverters in parallel without any problems. To ensure symmetrical feeding, connect the inverters uniformly to all 3 phases.

NOTE! The inverter is designed to be connected to three-phase systems. Utilities generally allow up to 6 kVA of unbalance, but check with your utility and try to balance the installation.

The connection to the grid should be done in the following way:

208 V / 240 V:
- Connect inverter No. 1, No. 4, No. 7, ... to L1 and L2
- Connect inverter No. 2, No. 5, No. 8, ... to L2 and L3
- Connect inverter No. 3, No. 6, No. 9, ... to L1 and L3

277 V:
- Connect inverter No. 1, No. 4, No. 7, ... to L1 and N
- Connect inverter No. 2, No. 5, No. 8, ... to L2 and N
- Connect inverter No. 3, No. 6, No. 9, ... to L3 and N

AC-side terminals and grounding terminals

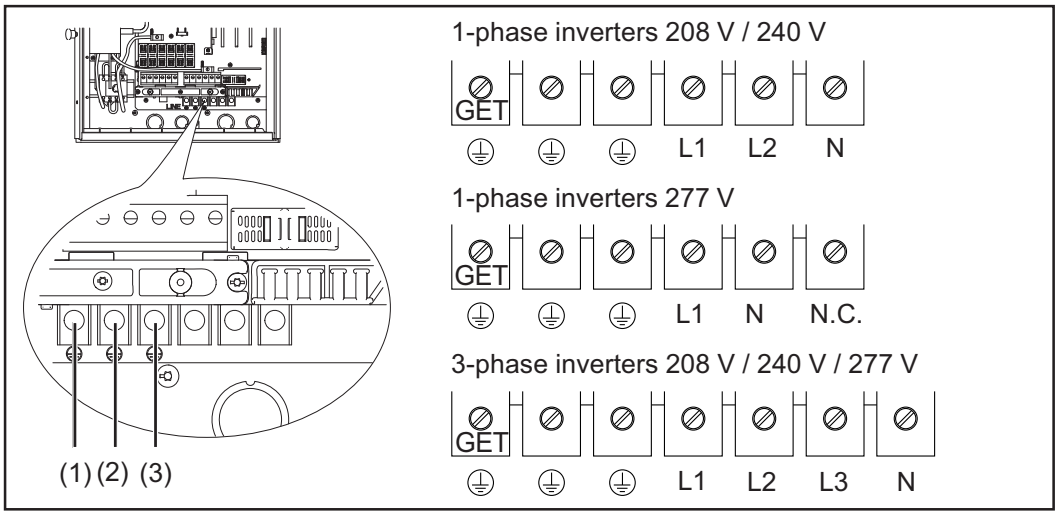

The terminals are designed for the following terminal connections:

Grounding terminals:	
(1)	Grounding Electrode Terminal (GET) A grounding electrode terminal may be required depending on local regulations.
(2)	Grounding of photovoltaic components (e.g., solar module frames) The ground for photovoltaic components such as solar module frames must be connected at the grounding terminals. The size of the wire usually corresponds to the largest wire in the DC system.
(3)	Grid grounding / Grounding conductor The inverter must be connected via the grounding terminal to the AC grid grounding.

NOTE!
- Use copper wires for all grounding cables
- Use only solid or stranded wire. Do not use fine stranded wire.
- See NEC section 250 for correct grounding.

AC-side terminals:	
L1	= Phase conductor L1
L2	= Phase conductor L2
L3	= Phase conductor L3
N	= Neutral conductor N

NOTE! The neutral conductor is not bonded to ground internally.

NC	= Not connected

Max. wire cross section AWG 4

Cross section of AC wires

WARNING! An electric shock can be fatal. Inadequately sized electrical components can cause serious injuries to persons and damage to (or loss of) property.
- All electrical installations must be carried out in accordance with the National Electrical Code, ANSI/NFPA 70, and any other codes and regulations applicable to the installation site.
- For installations in Canada, the installations must be done in accordance with applicable Canadian standards.
- Use minimum AWG 14 to maximum AWG 4, min. 167°F (75°C), copper wire for all AC wiring connections to the Fronius IG Plus.
- Use only solid or stranded wire. Do not use fine stranded wire.

Minimum cross section of AC wires (for an ambient temperature of 122 °F / 50 °C):

Fronius IG Plus	AC wire 208 V	AC wire 240 V	AC wire 277 V
V 3.0-1	AWG 12	AWG 14	AWG 14
V 3.8-1	AWG 12	AWG 12	AWG 12
V 5.0-1	AWG 8	AWG 10	AWG 12
V 6.0-1	AWG 8	AWG 8	AWG 10
V 7.5-1	AWG 6	AWG 6	AWG 8
V 10.0-1	AWG 4	AWG 4	AWG 6
V 10.0-3	AWG 8	AWG 8	-
V 11.4-1	AWG 4	AWG 4	AWG 4
V 11.4-3	AWG 8	AWG 8	-
V 12.0-3	-	-	AWG 12

NOTE! Voltage drop and other considerations may dictate larger size wires be used.

480 V Delta: 277 WYE Neutral conductor sizing

When the inverter is connected to a 480 V Delta: 277 V AC WYE grid, the neutral conductor is used as an active conductor.

NOTE! An inadequately sized neutral conductor can affect the inverter feeding energy into the grid.
The neutral conductor must be the same size as the other current-carrying conductors L1, L2 and L3.

Safety

Only an authorized electrician is permitted to connect this inverter to the public grid.

WARNING! An electric shock can be fatal. Danger from grid voltage and DC voltage from solar modules.

- The connection area should only be opened by a licensed electrician.
- The separate power stage set area should only be disconnected from the connection area after first being disconnected from the grid power.

Never work with live wires! Prior to all connection work, make sure that the AC and DC wires are not charged.

CAUTION! Danger of damaging the inverter due to an overload of the grid neutral conductor.

- Do not connect 2-phase and 3-phase devices to one phase
- Never operate multiphase devices in one phase

CAUTION! Danger of damaging the inverter from improperly connected terminals. Improperly connected terminals can cause thermal damage to the inverter and may cause a fire. When connecting the AC and DC cables, make sure that all terminals are tightened securely using the proper torque.

Connecting the Inverter to the public grid (AC)

NOTE! For outdoor installation use water tight conduit fittings and conduits only. Conduit fittings and conduits are not part of the scope of supply for the inverter.

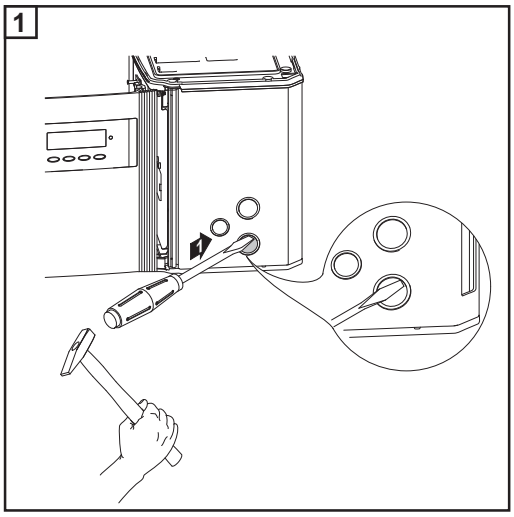

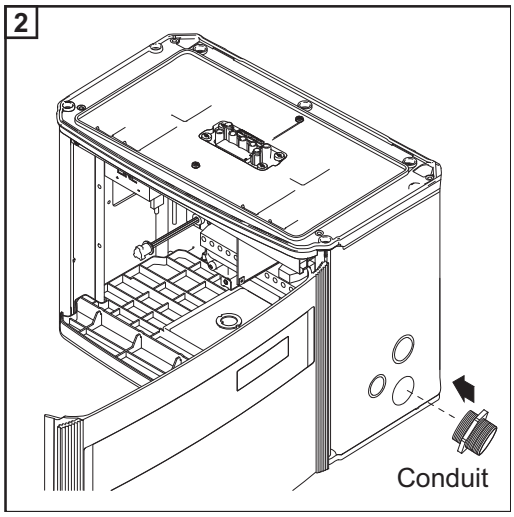

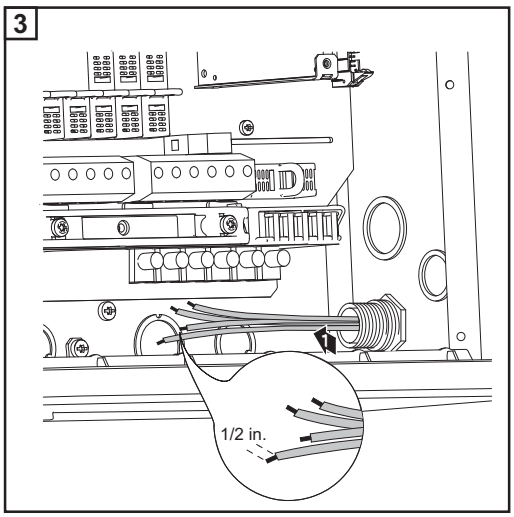

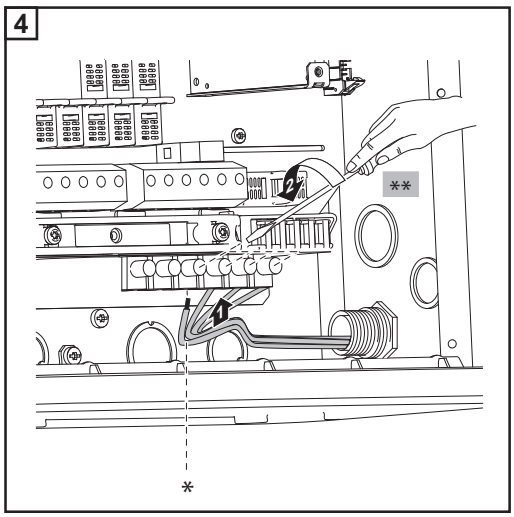

* Connect grid grounding / grounding conductor to the right grounding terminal

** Tightening torque:
Stranded wires 1.25 ft. lb.
Solid wires 0.81 ft. lb.

Connect the AC wires to the AC-side terminals depending on the grid and phase quantity of the inverter:

1 phase - 208 V / 240 V

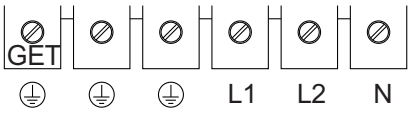

1 phase - 277 V

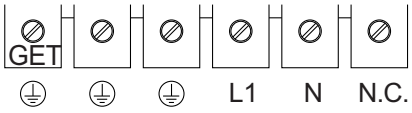

3 phases - 208 V / 240 V / 277 V

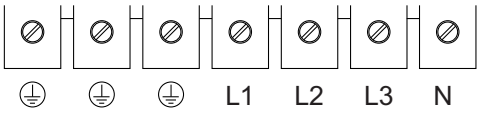

GET:
Grounding electrode terminal

N.C.:
Not used

NOTE! Form a min. 4 in. wire loop using all wires.

Connecting grounding electrode wire

If the photovoltaic system requires a grounding electrode, it should be connected as follows:

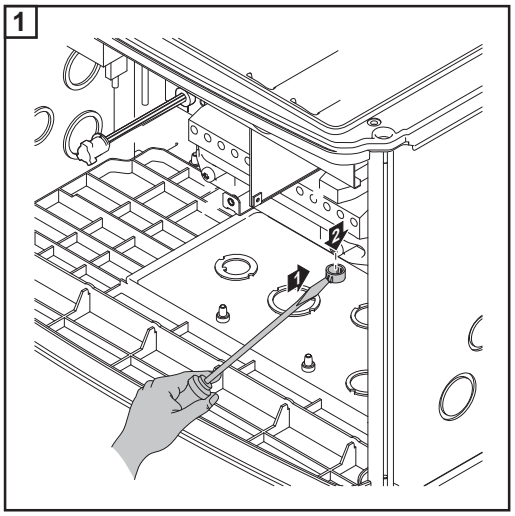

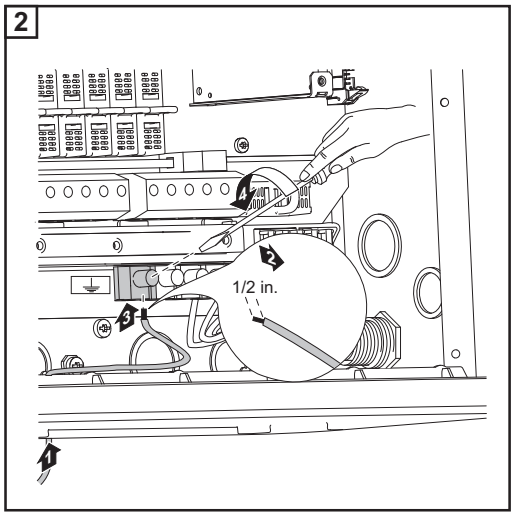

Tightening torque:
Stranded wires 1.25 ft. lb.
Solid wires 0.81 ft. lb.

NOTE! Form a min. 4 in. wire loop using all wires.

AC-side overcurrent protection

CAUTION! Risk of fire due to inadequately sized AC protection.
To reduce the risk of fire:
- connect only to a circuit provided with branch circuit overcurrent protection in accordance with the National Electrical Code, ANSI / NFPA 70;
- comply to the maximum values for the overcurrent protection according the following table.

Fronius IG Plus	Overcurrent protection		
	208 V	**240 V**	**277 V**
3.0-1	20 A	20 A	15 A
3.8-1	25 A	20 A	20 A
5.0-1	30 A	30 A	25 A
6.0-1	40 A	35 A	30 A
7.5-1	45 A	40 A	35 A
10.0-1	60 A	60 A	45 A
10.0-3	40 A	35 A	-
11.4-1	70 A	60 A	60 A
11.4-3	40 A	35 A	-
12.0-3	-	-	20 A

Maximium Values for AC overcurrent protection

Additional external AC and/or DC disconnect

Depending on the installation, an additional external AC and/or DC disconnect may be required if the inverter is installed in a location not easily accessible to utility or fire personnel. Contact your local authorities for additional information.

Connecting solar module strings to the inverter (DC)

General information about solar modules

In order to select suitable solar modules and get the most efficient use out of the inverter, please note the following points:

- The open circuit voltage of the solar modules increases as the temperature decreases (assuming constant irradiance). The open circuit voltage should never rise above 600 V regardless of temperature and an irradiance of 1000 W/m².
  If the open circuit voltage exceeds 600 volts, the inverter may be damaged, and all warranty rights will become null and void.
- More exact data for sizing the solar array for the particular location can be obtained using calculation tools such as the Fronius Configuration Tool (available at http://www.fronius-usa.com).
- See NEC table 690.7 for the appropriate code-related voltage adjustment factor for crystalline silicon modules, or use the manufacturer's specified voltage coefficient.

Safety

WARNING! An electric shock can be fatal. Danger due to grid voltage and DC voltage from solar modules.

- The connection area should only be opened by a licensed electrician.
- The separate power stage set area should only be disconnected from the connection area after first being disconnected from the grid power.
- The separate power stage set area should only be opened by Fronius-trained service personnel.

Never work with live wires! Prior to all connection work, make sure that the AC and DC wires are not charged.

The DC main switch is only used to switch off power to the power stage set. When the DC main switch is turned off, the connection area is still energized.

CAUTION! Danger of damaging the inverter from improperly connected terminals. Improperly connected terminals can cause thermal damage to the inverter and may cause a fire. When connecting the AC and DC cables, make sure that all terminals are tightened securely using the proper torque.

DC terminals

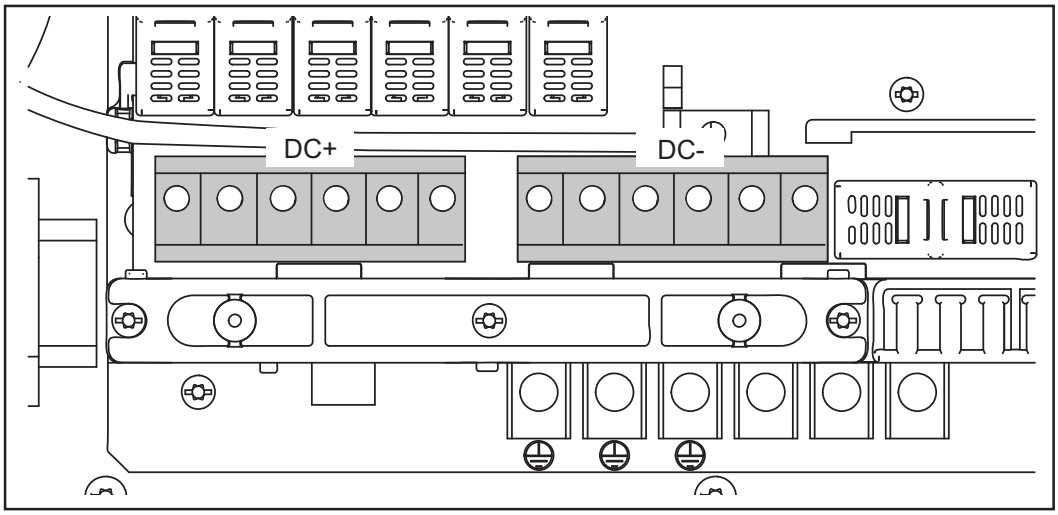

Polarity Reversal of Solar Module Strings

CAUTION! Risk of damage and fire to inverter due to reverse polarity of single solar module strings.
Reverse polarity of even one single solar module string can cause an unacceptable thermal load, which can lead to an inverter fire.
Confirm string polarity and voltage before connecting DC wires to the inverter!

Connecting all solar module strings with reverse polarity will not cause any damage to the inverter.

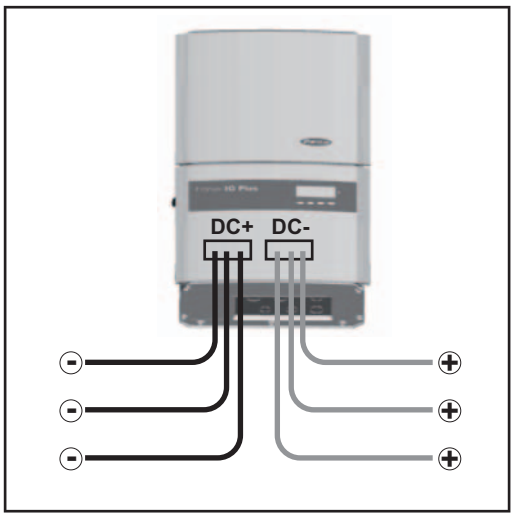

All solar module strings connected with reverse polarity - no damage to the inverter

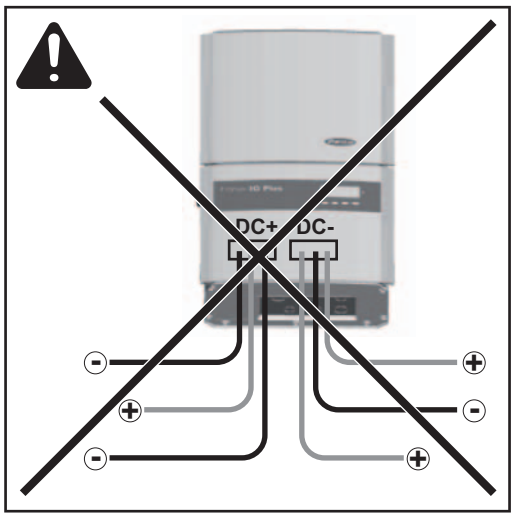

One single solar module string connected with reverse polarity - risk of damage, risk of fire !

Overview

'Connecting solar module strings to the inverter (DC)' includes the following sections:

- Connecting solar module strings
- Criteria for the proper selection of string fuses

- Connecting combined solar module strings using connecting distributors

- Solar module ground at positive pole: Connecting solar module strings
- Criteria for the proper selection of string fuses

- Solar module ground at positive pole: Connecting combined solar module strings using connecting distributors

Connecting Solar Module Strings

Solar module ground

The inverter is designed for a solar module ground at the negative pole. The solar module ground is carried out via a fuse in the inverter.

Solar module ground at negative pole with fuse:

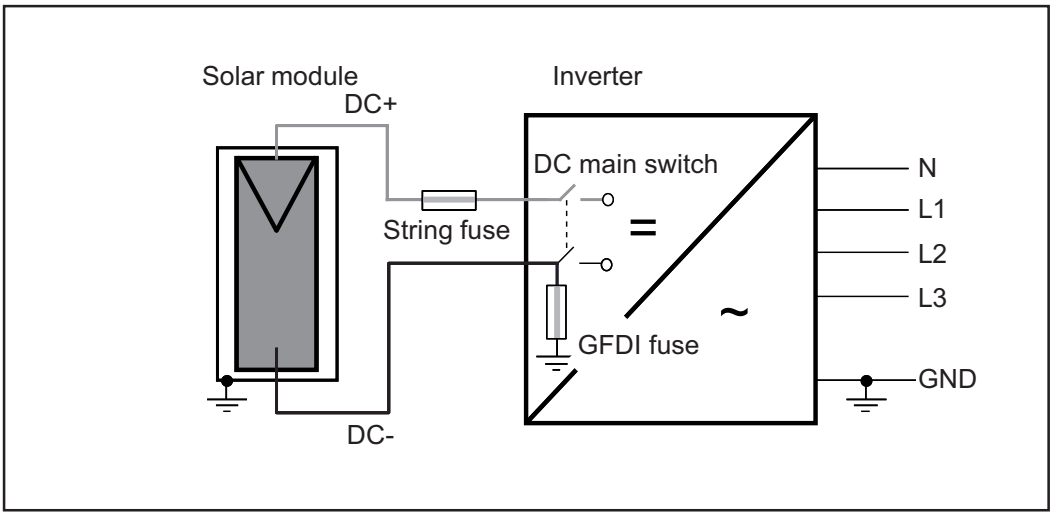

WARNING! An electric shock can be fatal. Normally grounded conductors may be ungrounded and energized when a ground fault is indicated. The ground fault has to be repaired before operation is resumed.

NOTE! Do not connect the ground to the negative DC line at any point! This is already done within the inverter. If negative DC lines are connected to the DC terminals or prior to this to the ground, this will circumvent the GFDI protection system, preventing your inverter from properly detecting a fault current.

In addition, turning the DC disconnect to the OFF/open circuit condition will not disconnect the array from ground, as it only disconnects the DC positive.

Wire cross section of solar module strings

WARNING! An electric shock can be fatal. Inadequately sized electrical components can cause serious injuries to persons and damage to (or loss of) property.

- All electrical installations must be carried out in accordance with the National Electrical Code, ANSI/NFPA 70, and any other codes and regulations applicable to the installation site.
- For installations in Canada, the installations must be done in accordance with applicable Canadian standards.
- Use minimum AWG 14, min. 167 °F (75 °C), copper wire for all grounding wires (see NEC table 250.122).
- Use minimum AWG 14 to maximum AWG 6, min. 167°F (75°C), copper wire for all DC wiring connections to the inverter. Voltage drop and other considerations may dictate larger size wires be used.
- Use only solid or stranded wire. Do not use fine stranded wire.

NOTE! To ensure an effective strain relief device for solar module strings, only use cable cross sections of the same size.

Connecting solar module strings

WARNING! An electric shock can be fatal. Danger due to grid voltage and DC voltage from solar modules.
The DC main switch is only used to switch off power to the power stage set. When the DC main switch is turned off, parts of the connection area are still energized.

NOTE! For outdoor installation use water tight conduit fittings and conduits only. Conduit fittings and conduits are not part of the scope of supply for the inverter.

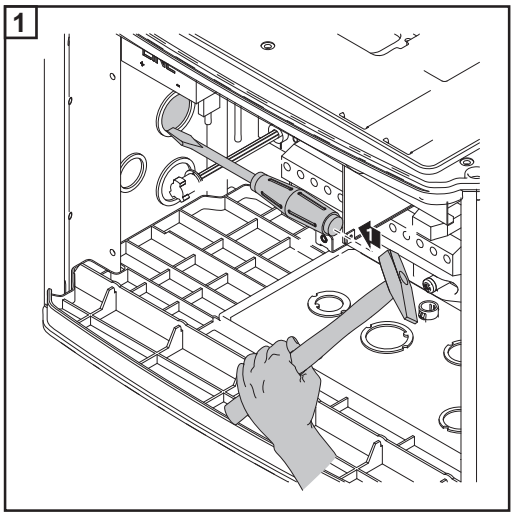

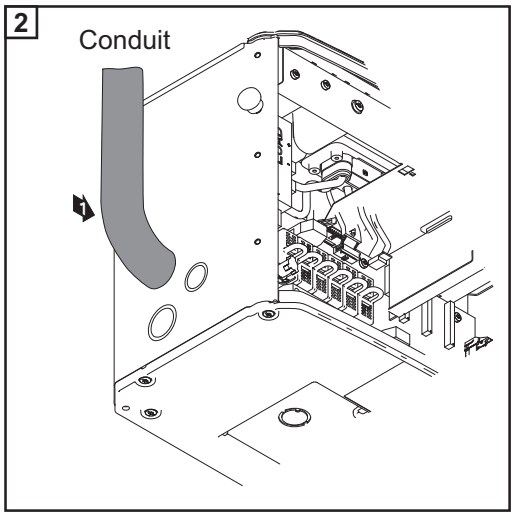

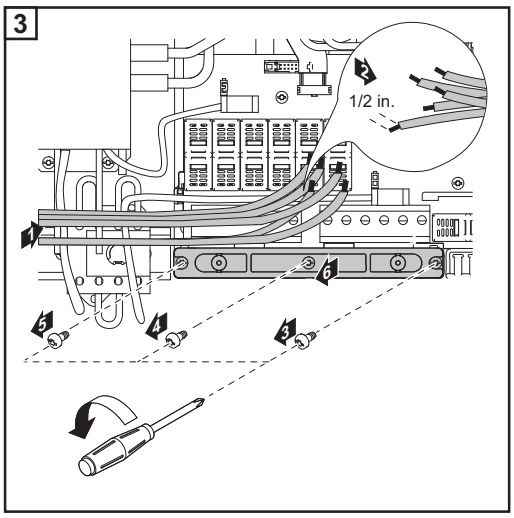

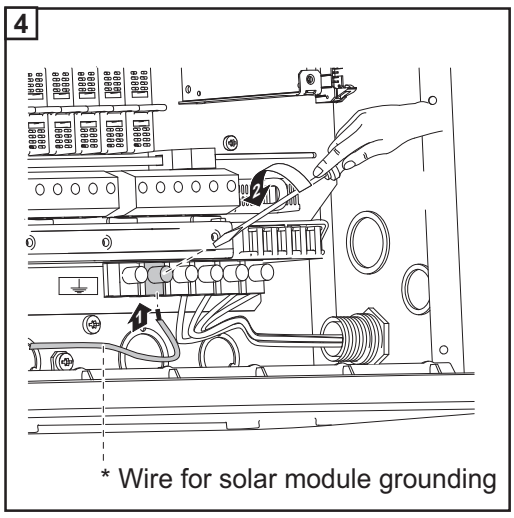

Tightening torque:
Stranded wires 1.25 ft. lb.
Solid wires 0.81 ft. lb.

Fronius recommends the following procedure for connecting more than one solar module strings to the DC terminals:

1. Remove metal slugs with fuse covers from the fuse holders
2. Connect solar module strings
3. Check voltage and polarity on all DC terminals in use
4. Re-insert metal slugs or correctly sized fuses

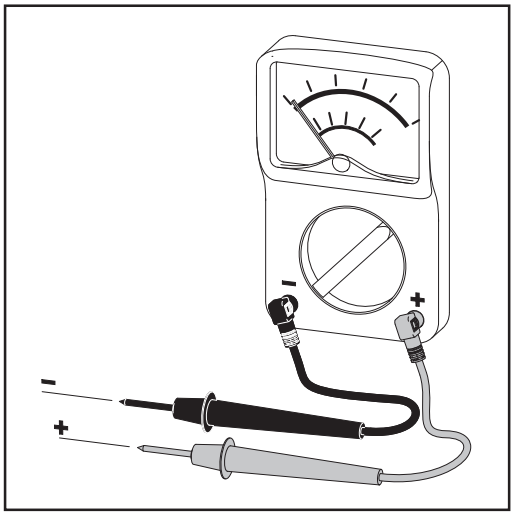

NOTE! Connecting the DC wiring with the wrong polarity may cause damage to the inverter. Check both the polarity and the open circuit voltage.

The DC Voltage must not exceed 600 V, regardless of temperature.

WARNING! An electric shock can be fatal. Danger due to DC voltage from solar modules.
Once a solar module string is connected, the lower clip of the respective fuse holder is energized (even with the DC main switch in the off position).
Before commissioning the inverter insert metal slulgs or correctly sized fuses with fuse covers into the respective fuse holder.

CAUTION! Danger of damaging the inverter by overload.
- Only connect a maximum of 20 A to an individual DC terminal.
- Connect the DC+ and DC- cables to the correct DC+ and DC- terminals on the inverter.

5

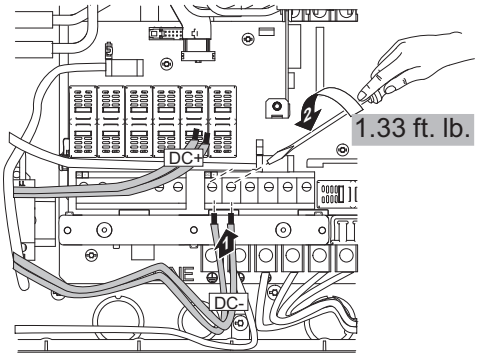

Tightening torque for solid and stranded wires

6

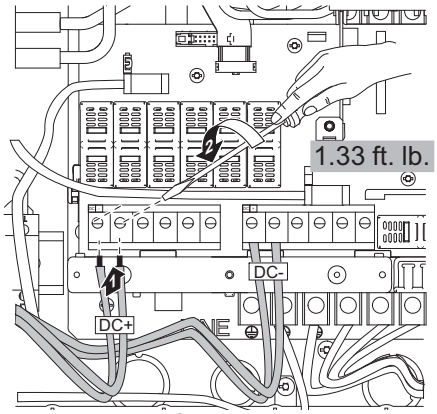

Tightening torque for solid and stranded wires

NOTE! Form a min. 4 in. wire loop using all wires.

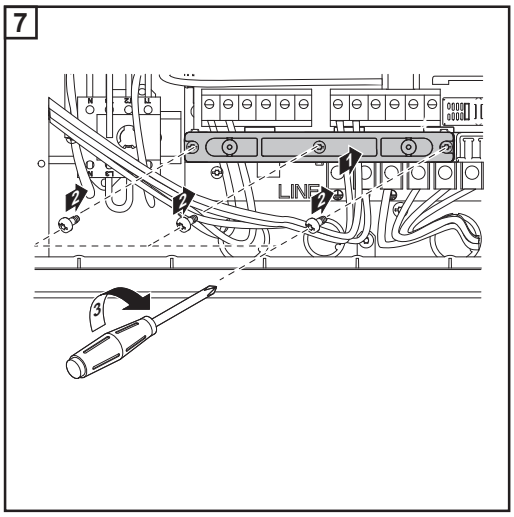

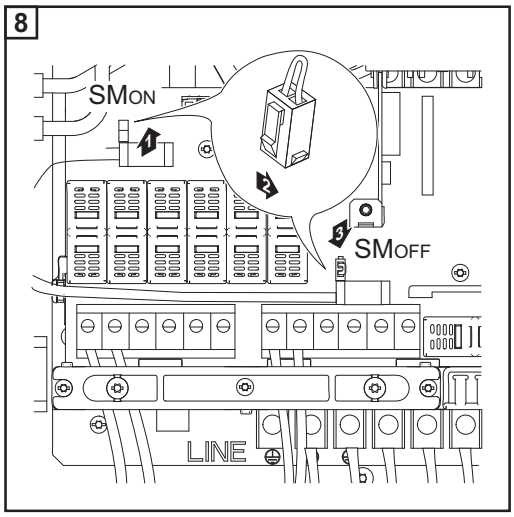

IMPORTANT!

- Set the jumper from the 'SMON' position to the 'SMOFF' position for correct measurement results
- Check the polarity and voltage of the solar module strings: the voltage should be a max. of 600 V, the difference between the individual solar module strings should be a max. of 10 V.

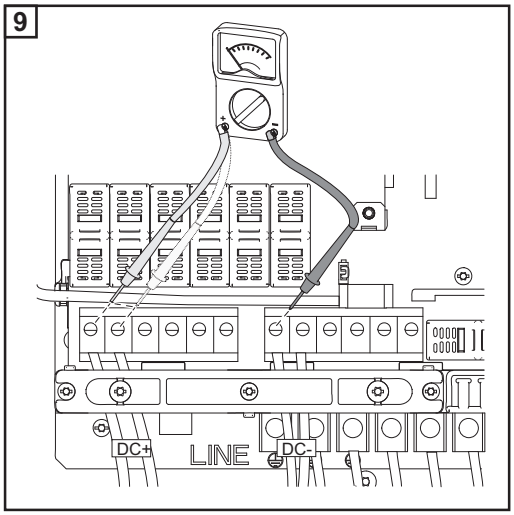

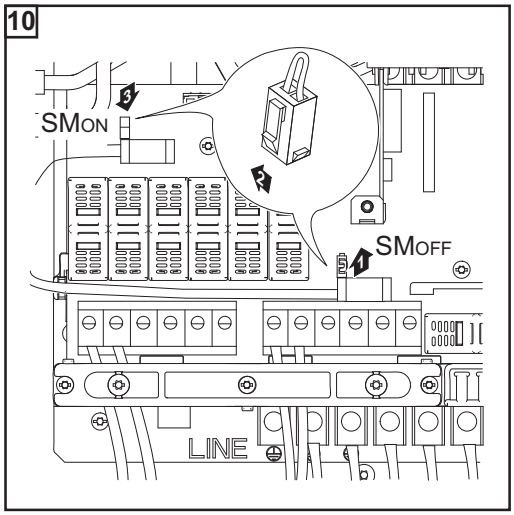

Inserting string fuses

IMPORTANT The inverter is shipped with conductive slugs in the fuse holders. Series fusing may be required depending on the type of solar module used in the system.
See NEC 690.9.

1 Select string fuses according to the information from the solar module manufacturer or as per ‘Criteria for the proper selection of string fuses’ (max. 20 A per individual DC terminal)

IMPORTANT!
- Follow all solar module safety instructions
- Follow all solar module manufacturer requirements

WARNING! An electric shock can be fatal. Danger from DC voltage from solar modules. Fuse covers are for installation purposes only. They offer no protection against contact.

2

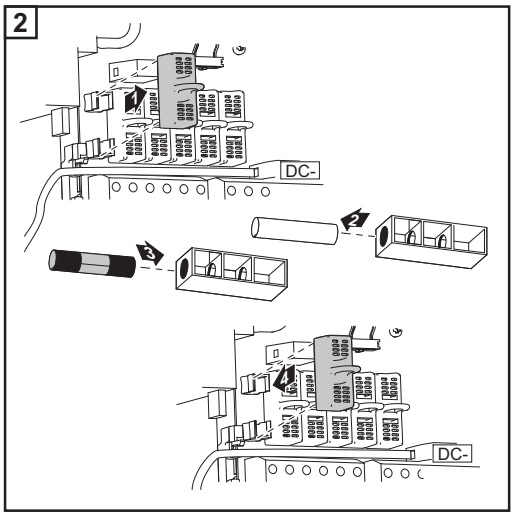

NOTE!
- Insert fuses only with a fuse cover in the respective fuse holder
- Do not operate the inverter without fuse covers

Connecting combined solar module strings using connecting distributors

General

If several solar module strings are combined outside of the inverter into one solar module string, the current of the solar module string can be higher than the current permitted for a DC terminal (20 A).

In this case, you have the option of connecting the DC cables to the inverter using a connecting distributor.

Additional components required

The following components are required for connecting DC cables via a connecting distributor:

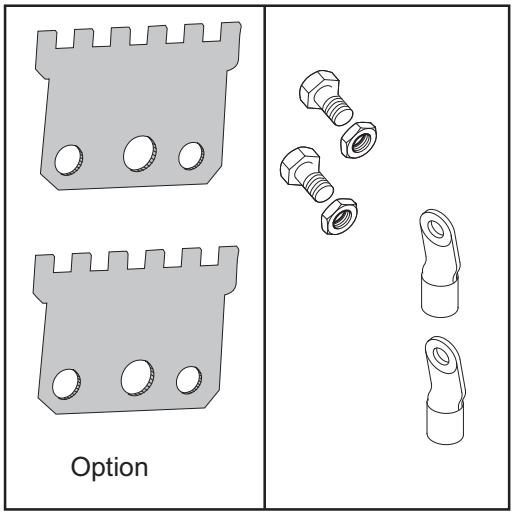

- 2 connecting distributors
  (standard at Fronius IG Plus
  10.0-1/10.0-3/11.4-1/11.4-3/12.0-3
  or
  available from Fronius as an option)
- Cable lugs

  Select the cable lugs according to the available DC cables
- Hexagon screws
- Hexagon nuts

  that fit the cable lugs

Solar module ground

The inverter is designed for a solar module ground at the negative pole. The solar module ground is carried out via a fuse in the inverter.

Solar module ground at negative pole with fuse:

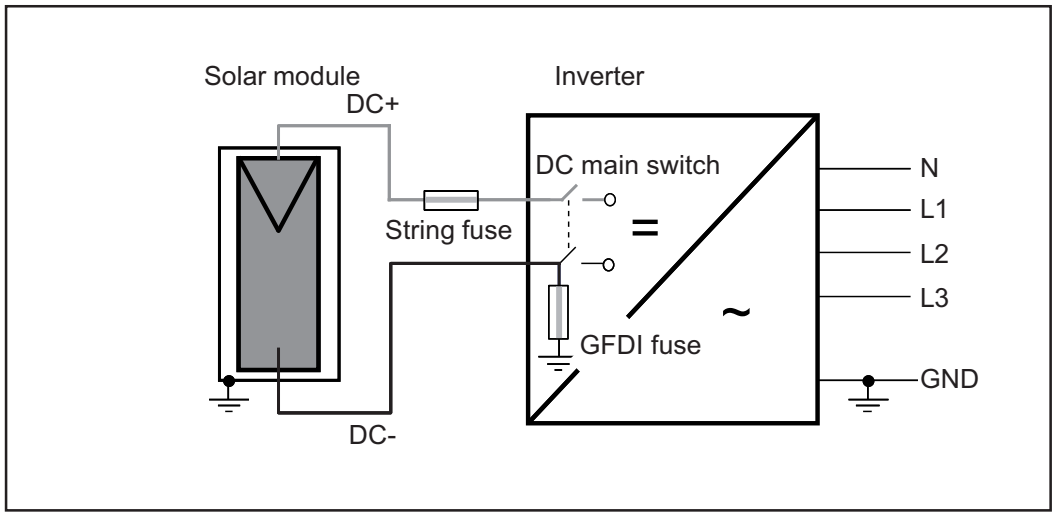

WARNING! An electric shock can be fatal. Normally grounded conductors may be ungrounded and energized when a ground fault is indicated. The ground fault has to be repaired before operation is resumed.

NOTE! Do not connect the ground to the negative DC line at any point! This is already done within the inverter. If negative DC lines are connected to the DC terminals or prior to this to the ground, this will circumvent the GFDI protection system, preventing your inverter from properly detecting a fault current.

In addition, turning the DC disconnect to the OFF/open circuit condition will not disconnect the array from ground, as it only disconnects the DC positive.

Safety

WARNING! An electric shock can be fatal. Inadequately sized electrical components can cause serious injuries to persons and damage to (or loss of) property.

- All electrical installations must be carried out in accordance with the National Electrical Code, ANSI/NFPA 70, and any other codes and regulations applicable to the installation site.
- For installations in Canada, the installations must be done in accordance with applicable Canadian standards.
- Use copper wires for all grounding cables.
- See NEC section 250 for correct grounding.
- Use only solid or stranded wire. Do not use fine stranded wire.

Connecting combined solar module strings using connecting distributors

WARNING! An electric shock can be fatal. Danger due to grid voltage and DC voltage from solar modules.
The DC main switch is only used to switch off power to the power stage set. When the DC main switch is turned off, parts of the connection area are still energized.

NOTE! For outdoor installation use water tight conduit fittings and conduits only. Conduit fittings and conduits are not part of the scope of supply for the inverter.

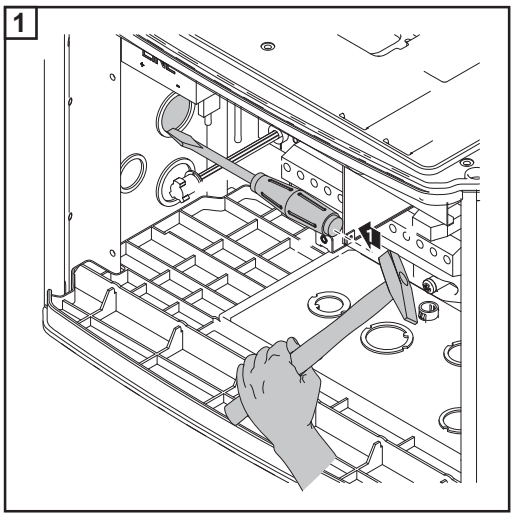

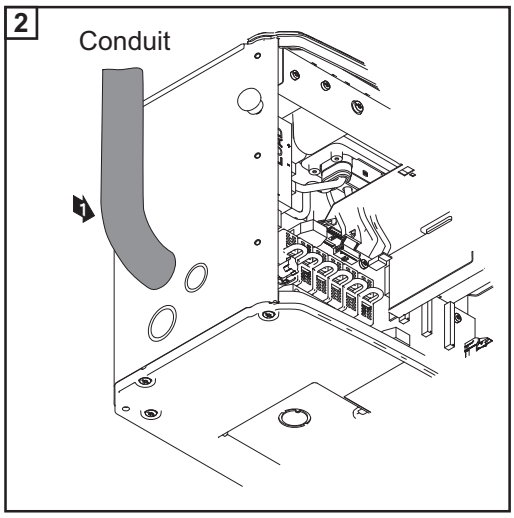

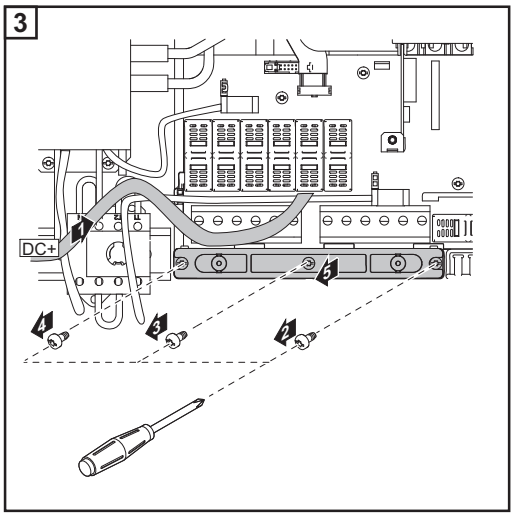

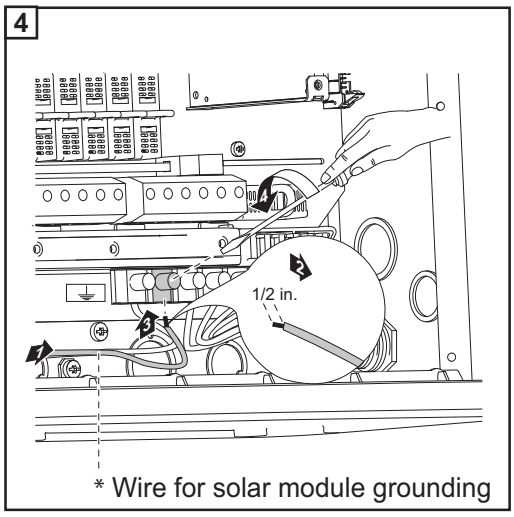

Tightening torque:
Stranded wires 1.25 ft. lb.
Solid wires 0.81 ft. lb.

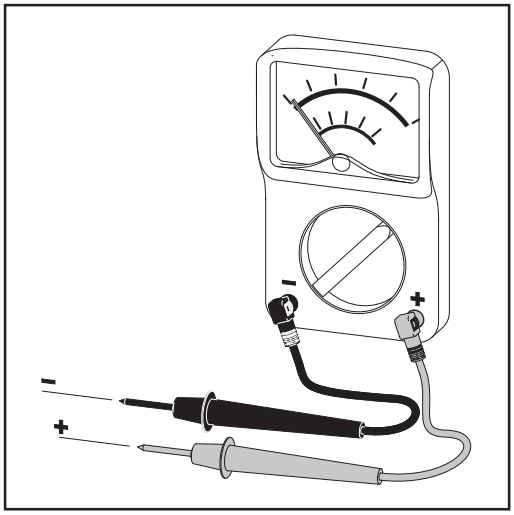

NOTE! Connecting the DC wiring with the wrong polarity may cause damage to the inverter. Check both the polarity and the open circuit voltage.

The DC Voltage must not exceed 600 V, regardless of temperature.

WARNING! An electric shock can be fatal. Danger due to DC voltage from solar modules.
Once solar module strings are connected using connecting distributors, the lower clips of the fuse holders are energized (even with the DC main switch in the off position).
Before commissioning the inverter insert metal slulgs with fuse covers into the fuse holders.

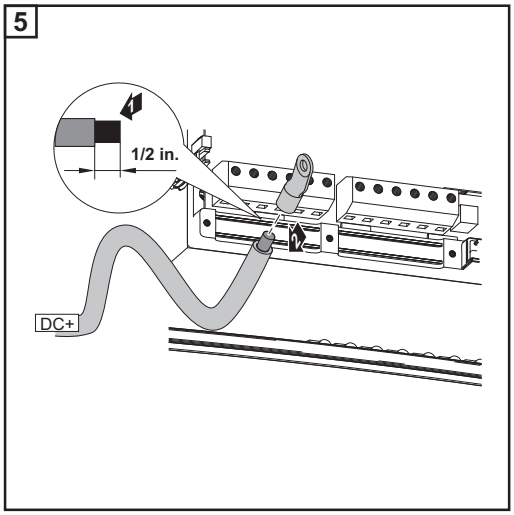

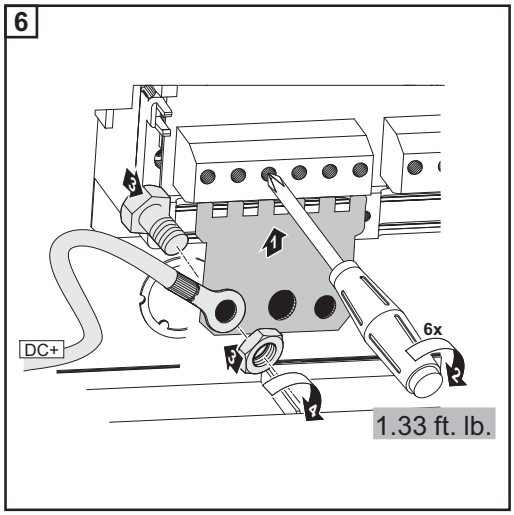

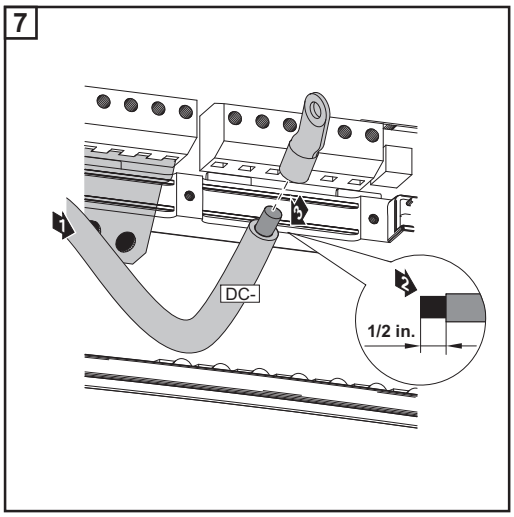

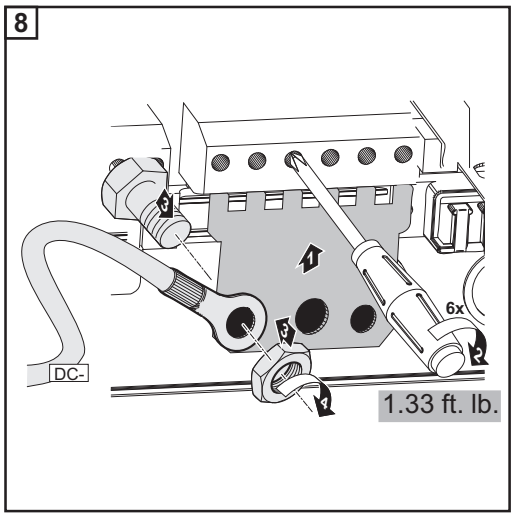

NOTE! Form a min. 4 in. wire loop using all wires.

CAUTION! Danger of damaging the inverter by overload. Before start-up operation make sure that there is a conductive slug in each fuse holder for string fuses.

- Insert conductive slugs only with a fuse cover in the respective fuse holder
- Do not operate the inverter without fuse covers

Solar Module Ground at Positive Pole: Connecting Solar Module Strings

General

The following steps are necessary when the solar module manufacturer requires a solar module ground at the positive pole.

Solar module ground at positive pole

Solar module ground at positive pole with fuse:

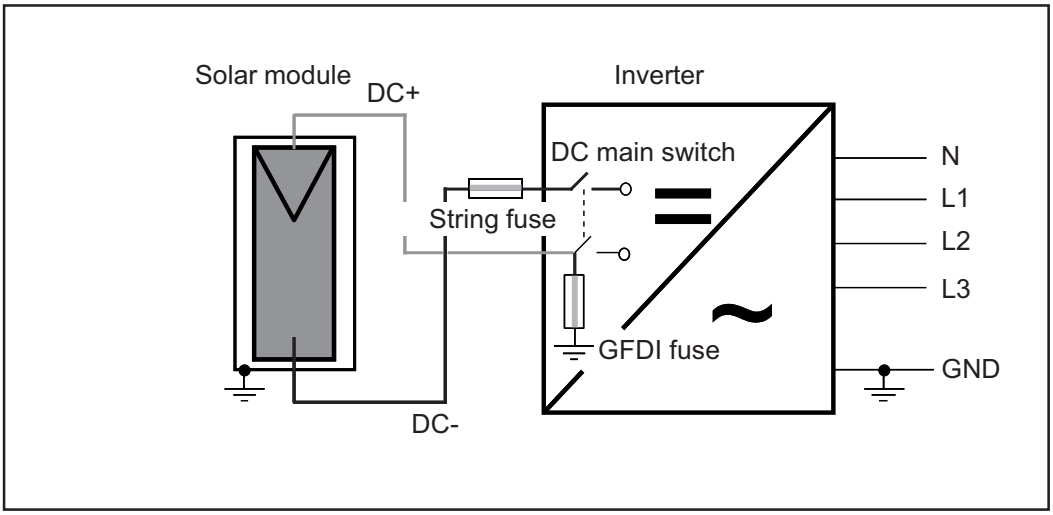

WARNING! An electric shock can be fatal. Normally grounded conductors may be ungrounded and energized when a ground fault is indicated. The ground fault has to be repaired before operation is resumed.

NOTE! Do not connect the ground to the positive DC line at any point! This is already done within the inverter. If positive DC lines are connected to the DC terminals or prior to this to the ground, this will circumvent the GFDI protection system, preventing your inverter from properly detecting a fault current.

In addition, turning the DC disconnect to the OFF/open circuit condition will not disconnect the array from ground, as it only disconnects the DC negative.

Wire cross section of solar module strings

WARNING! An electric shock can be fatal. Inadequately sized electrical components can cause serious injuries to persons and damage to (or loss of) property.

- All electrical installations must be carried out in accordance with the National Electrical Code, ANSI/NFPA 70, and any other codes and regulations applicable to the installation site.
- For installations in Canada, the installations must be done in accordance with applicable Canadian standards.
- Use minimum AWG 14, min. 167 °F (75 °C), copper wire for all grounding wires (see NEC table 250.122).
- Use minimum AWG 14 to maximum AWG 6, min. 167°F (75°C), copper wire for all DC wiring connections to the inverter. Voltage drop and other considerations may dictate larger size wires be used.
- Use only solid or stranded wire. Do not use fine stranded wire.

NOTE! To ensure an effective strain relief device for solar module strings, only use cable cross sections of the same size.

Solar module ground at positive pole: Connecting solar module strings

WARNING! An electric shock can be fatal. Danger due to grid voltage and DC voltage from solar modules.
The DC main switch is only used to switch off power to the power stage set. When the DC main switch is turned off, parts of the connection area are still energized.

NOTE! For outdoor installation use water tight conduit fittings and conduits only. Conduit fittings and conduits are not part of the scope of supply for the inverter.

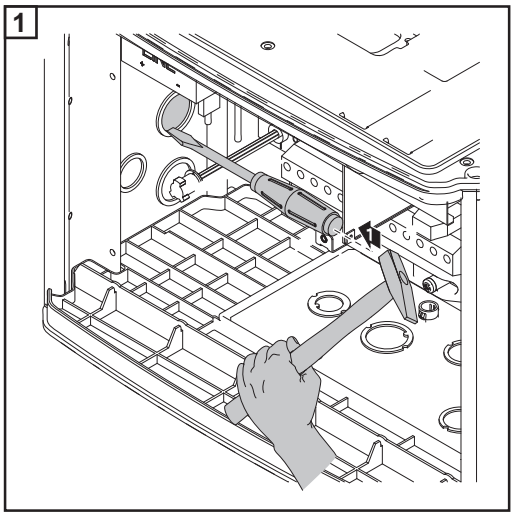

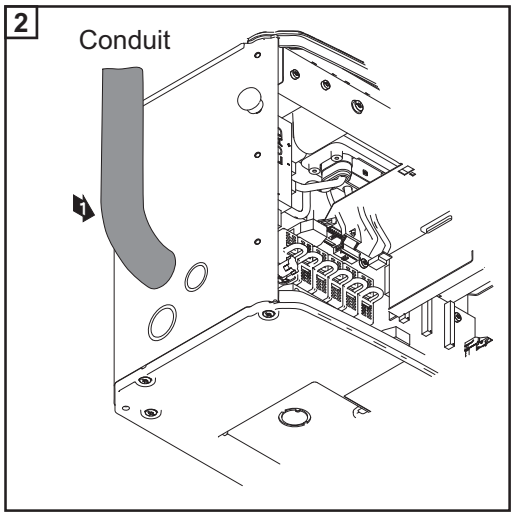

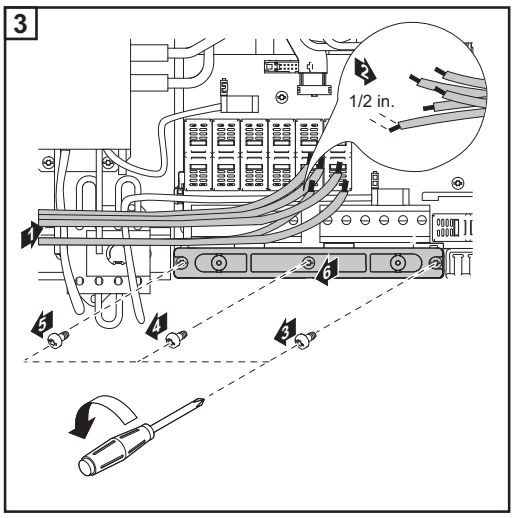

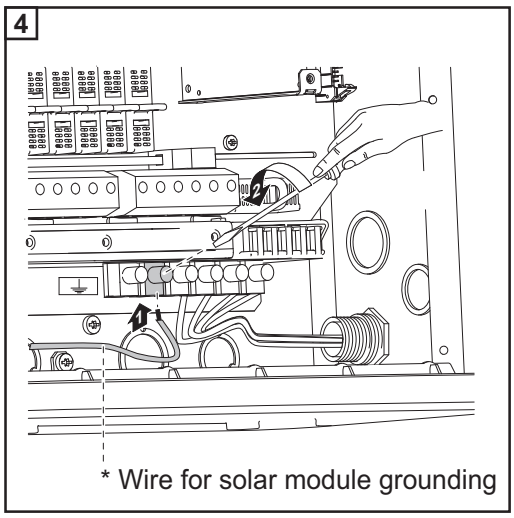

Tightening torque:
Stranded wires 1.25 ft. lb.
Solid wires 0.81 ft. lb.

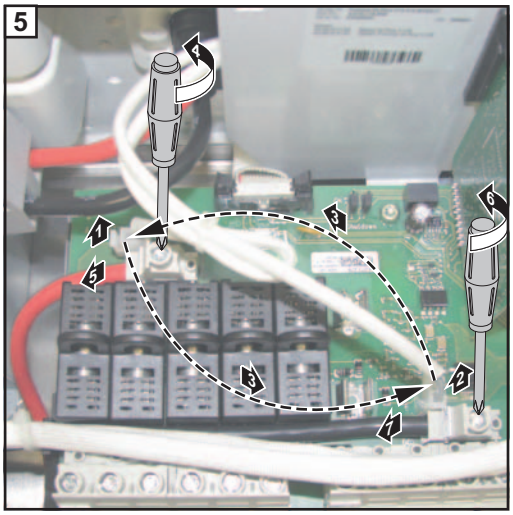

- Disconnect the DC voltage measuring and reverse polarity (1-2-3)
- Disconnect the DC+ cable from the DC+ terminal (4-5)
- Disconnect the DC- cable from the DC- terminal (6-7)

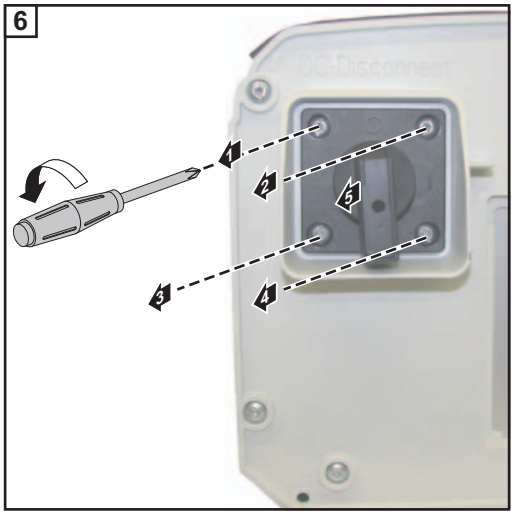

- Remove 4 screws (1-2-3-4)
- Remove switch knob and switch plate (5)

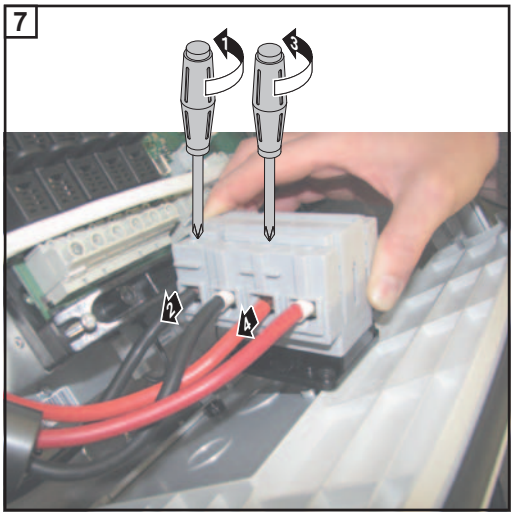

- Disconnect DC- cable from the DC main swich (1-2)
- Disconnect DC+ cable from the DC main switch (3-4)
- Unthread both cables from the inverter

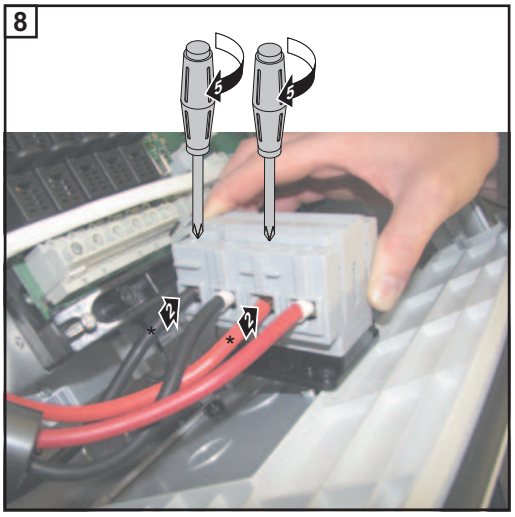

* new cables delivered with the inverter:
the red cable is longer than the black cable.

- Connect the black cable to the DC main switch (1-2)
- Connect the red cable to the DC main switch (3-4)

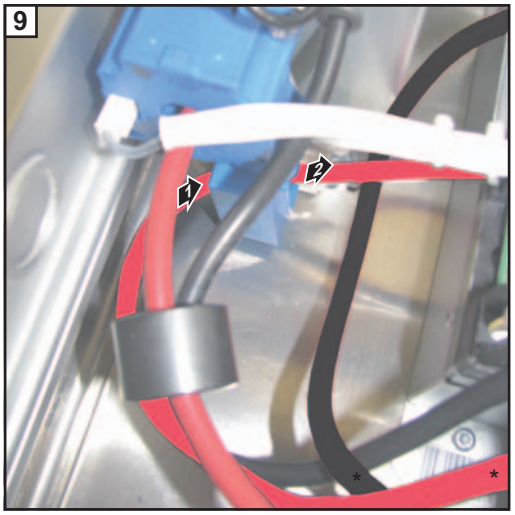

- Lead the new red cable from the DC main switch through the current sensor

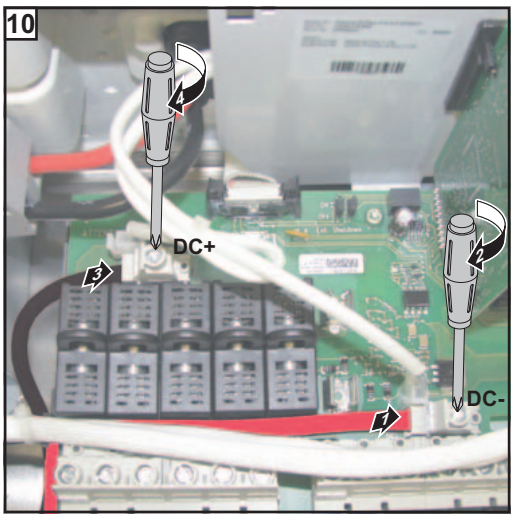

- Connect the red cable to the DC- terminal
- Connect the black cable to the DC+ terninal

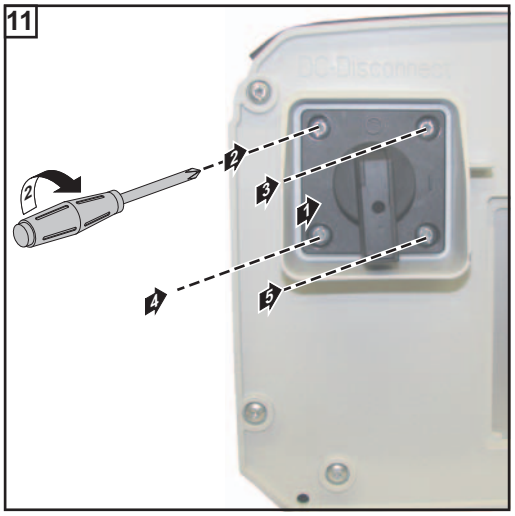

- Insert switch plate and switch knob (1)
- Fix switch plate and switch knob using 4 screws (2-3-4-5)

Tightening torque: 2.21 ft. lb.

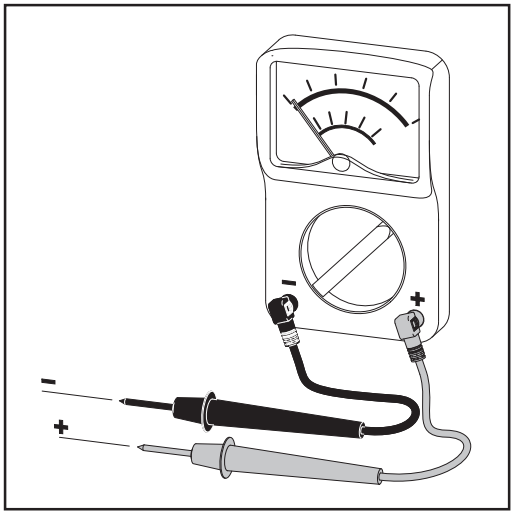

NOTE! Connecting the DC wiring with the wrong polarity may cause damage to the inverter. Check both the polarity and the open circuit voltage!

The DC Voltage must not exceed 600 V, regardless of temperature.

Fronius recommends the following procedure for connecting more than one solar module strings to the DC terminals:

1. Remove metal slugs with fuse covers from the fuse holders
2. Connect solar module strings
3. Check voltage and polarity on all DC terminals in use
4. Re-insert metal slugs or correctly sized fuses

WARNING! An electric shock can be fatal. Danger due to DC voltage from solar modules.
Once a solar module string is connected, the lower clip of the respective fuse holder is energized (even with the DC main switch in the off position).
Before commissioning the inverter insert metal slulgs or correctly sized fuses with fuse covers into the respective fuse holder.

CAUTION! Danger of damaging the inverter by overload.

- Only connect a maximum of 20 A to an individual DC terminal.
- Connect the DC+ wire to the right connection of the inverter's DC terminals.
- Connect the DC- wire to the left connection of the inverter's DC terminals.
- Identify the reversed polarity with (+) and (-) according to step 14

12

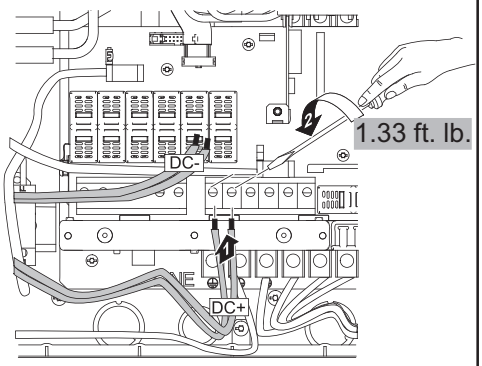

Tightening torque for solid and stranded wires

13

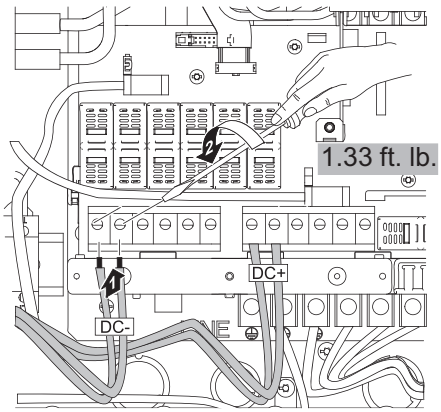

Tightening torque for solid and stranded wires

14

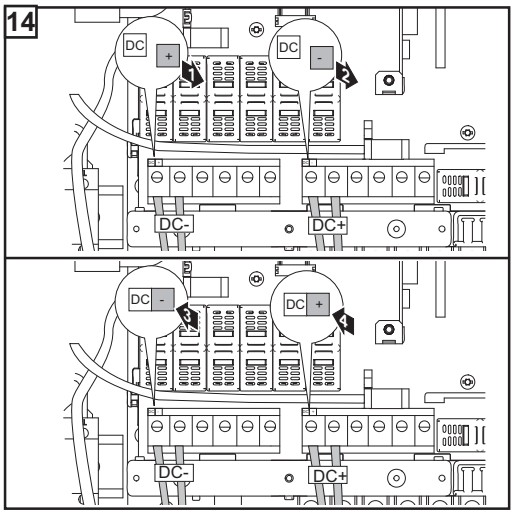

NOTE! Form a min. 4 in. wire loop using all wires.

15

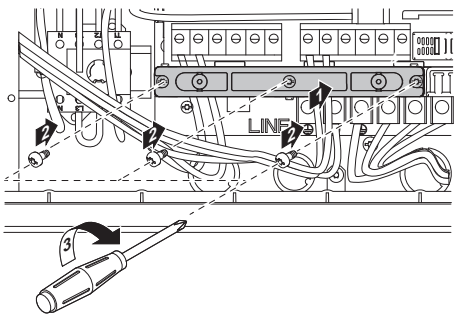

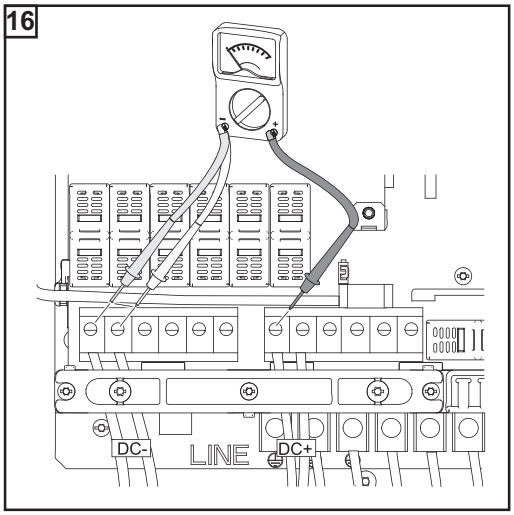

IMPORTANT! Check the polarity and voltage of the solar module strings: the voltage should be a max. of 600 V, the difference between the individual solar module strings should be a max. of 10 V.

Inserting string fuses

IMPORTANT The inverter is shipped with conductive slugs in the fuse holders. Series fusing may be required depending on the type of solar module used in the system.
See NEC 690.9.

1 Select string fuses according to the information from the solar module manufacturer or as per 'Criteria for the proper selection of string fuses' (max. 20 A per individual DC terminal)

IMPORTANT!
- Follow all solar module safety instructions
- Follow all solar module manufacturer requirements

WARNING! An electric shock can be fatal. Danger from DC voltage from solar modules. Fuse covers are for installation purposes only. They offer no protection against contact.

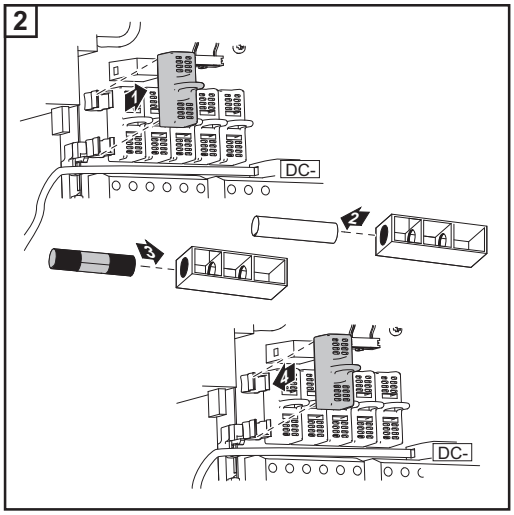

NOTE!
- Insert fuses only with a fuse cover in the respective fuse holder
- Do not operate the inverter without fuse covers

Solar module ground at positive pole: Connecting combined solar module strings using connecting distributors

General

The following steps are necessary when the solar module manufacturer requires a solar module ground at the positive pole.

If several solar module strings are combined outside of the inverter into one solar module string, the current of the solar module string can be higher than the current permitted for a DC terminal (20 A).

In this case, you have the option of connecting the DC cables to the inverter using a connecting distributor.

Additional components required

The following components are required for connecting DC cables via a connecting distributor:

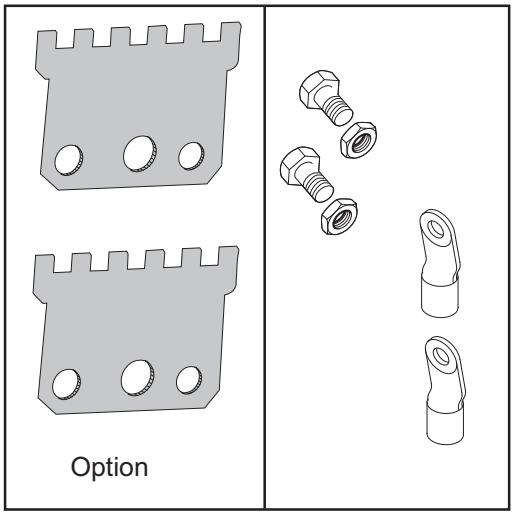

- 2 connecting distributors
  (standard at Fronius IG Plus
  10.0-1/10.0-3/11.4-1/11.4-3/12.0-3
  or
  available from Fronius as an option)
- Cable lugs

  Select the cable lugs according to the available DC cables
- Hexagon screws
- Hexagon nuts

  that fit the cable lugs

Solar module ground at positive pole

Solar module ground at positive pole with fuse:

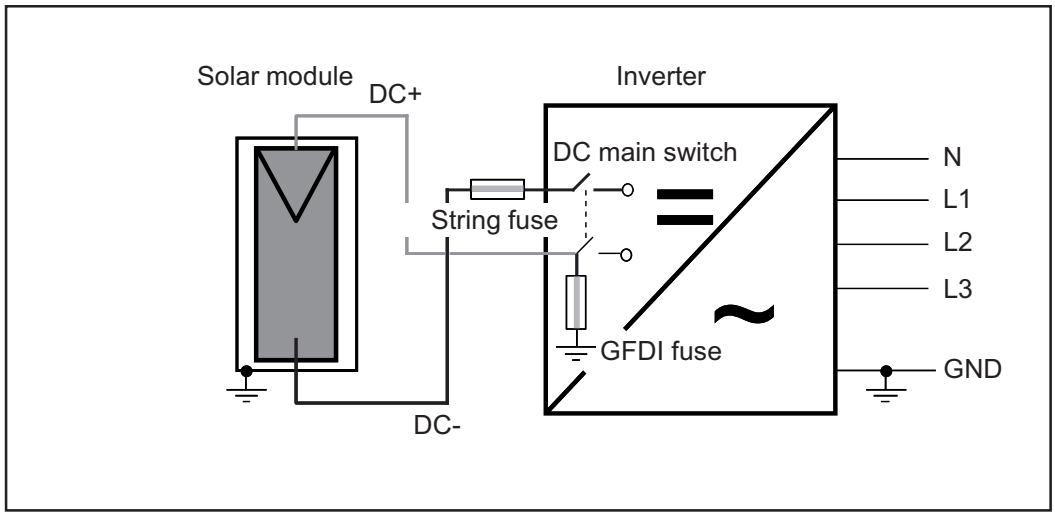

WARNING! An electric shock can be fatal. Normally grounded conductors may be ungrounded and energized when a ground fault is indicated. The ground fault has to be repaired before operation is resumed.

NOTE! Do not connect the ground to the positive DC line at any point! This is already done within the inverter. If positive DC lines are connected to the DC terminals or prior to this to the ground, this will circumvent the GFDI protection system, preventing your inverter from properly detecting a fault current.

In addition, turning the DC disconnect to the OFF/open circuit condition will not disconnect the array from ground, as it only disconnects the DC negative.

Safety

WARNING! An electric shock can be fatal. Inadequately sized electrical components can cause serious injuries to persons and damage to (or loss of) property.

- All electrical installations must be carried out in accordance with the National Electrical Code, ANSI/NFPA 70, and any other codes and regulations applicable to the installation site.
- For installations in Canada, the installations must be done in accordance with applicable Canadian standards.
- Use copper wires for all grounding cables.
- See NEC section 250 for correct grounding.
- Use only solid or stranded wire. Do not use fine stranded wire.

Solar module ground at positive pole: Connecting combined solar module strings using connecting distributors

WARNING! An electric shock can be fatal. Danger due to grid voltage and DC voltage from solar modules.
The DC main switch is only used to switch off power to the power stage set. When the DC main switch is turned off, parts of the connection area are still energized.

NOTE! For outdoor installation use water tight conduit fittings and conduits only. Conduit fittings and conduits are not part of the scope of supply for the inverter.

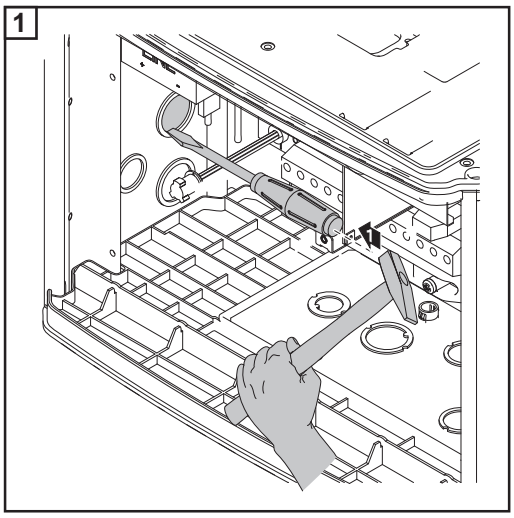

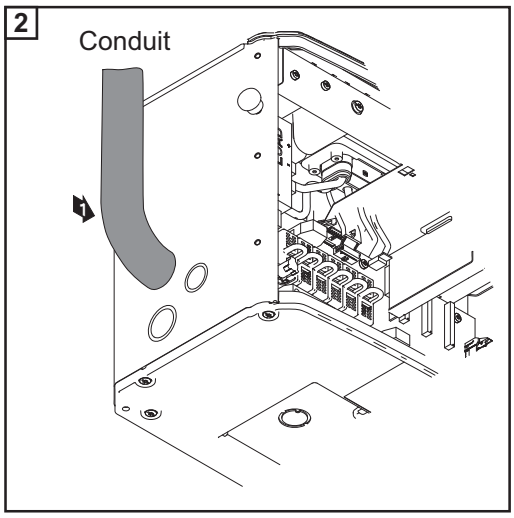

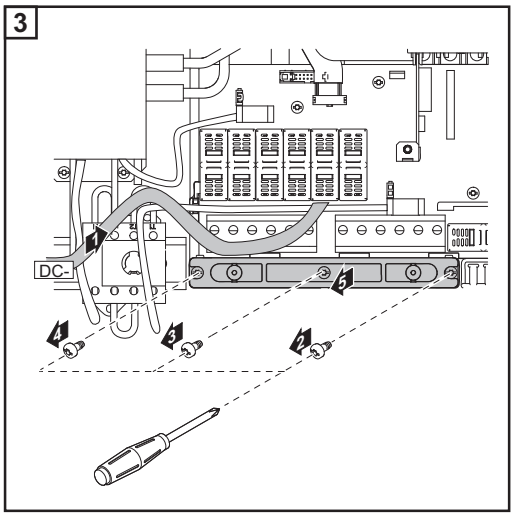

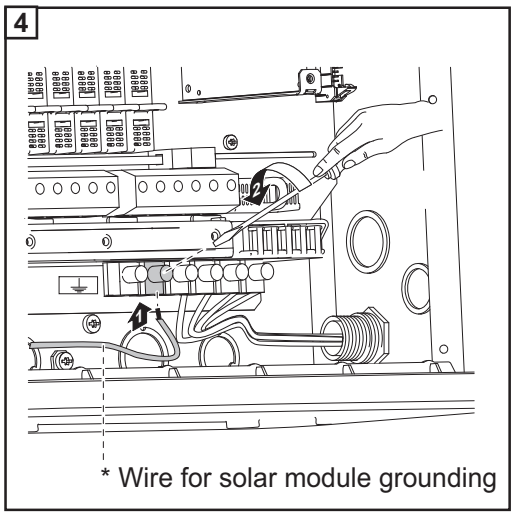

Tightening torque:
Stranded wires 1.25 ft. lb.
Solid wires 0.81 ft. lb.

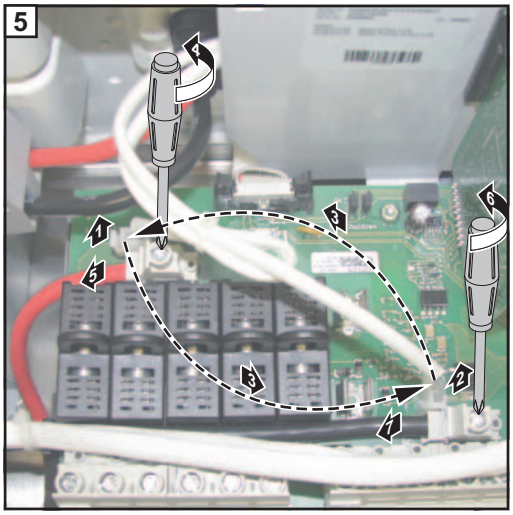

- Disconnect the DC voltage measuring and reverse polarity (1-2-3)
- Disconnect the DC+ cable from the DC+ terminal (4-5)
- Disconnect the DC- cable from the DC- terminal (6-7)

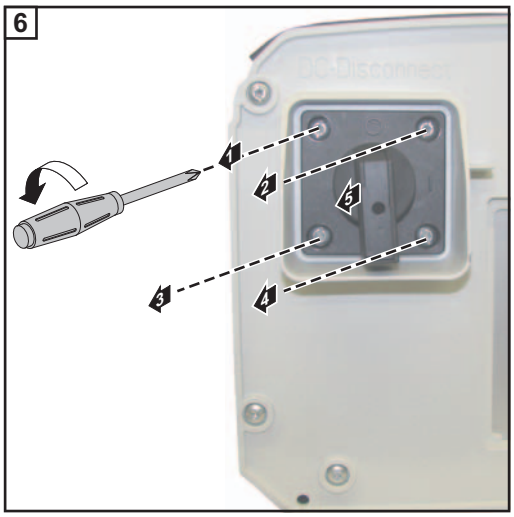

- Remove 4 screws (1-2-3-4)
- Remove switch knob and switch plate (5)

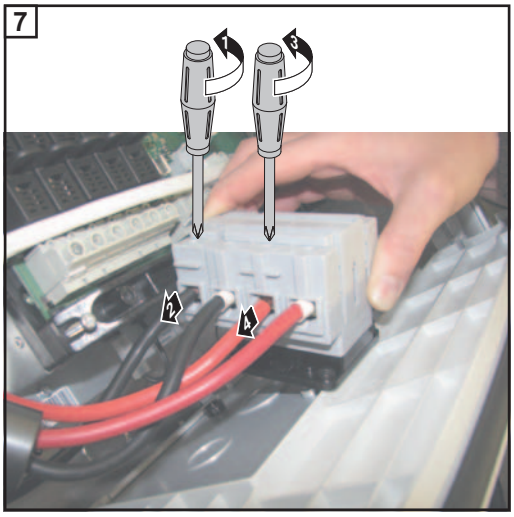

- Disconnect DC- cable from the DC main swich (1-2)
- Disconnect DC+ cable from the DC main switch (3-4)
- Unthread both cables from the inverter

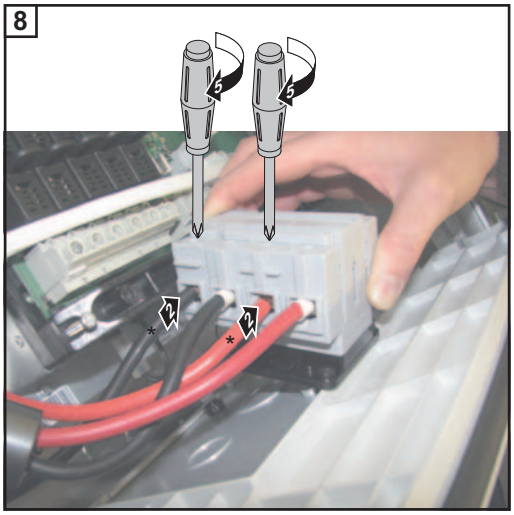

* new cables delivered with the inverter:
the red cable is longer than the black cable.

- Connect the black cable to the DC main switch (1-2)
- Connect the red cable to the DC main switch (3-4)

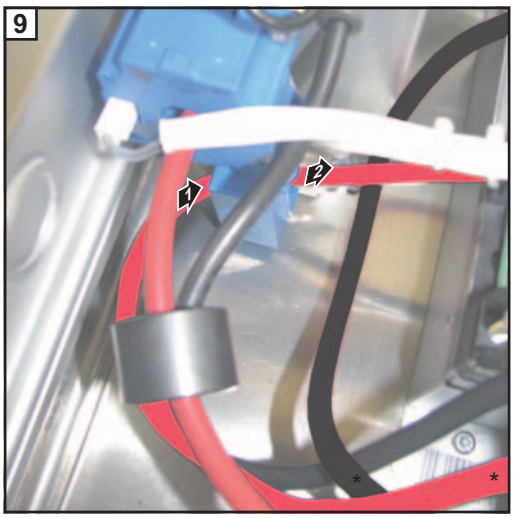

- Lead the new red cable from the DC main switch through the current sensor

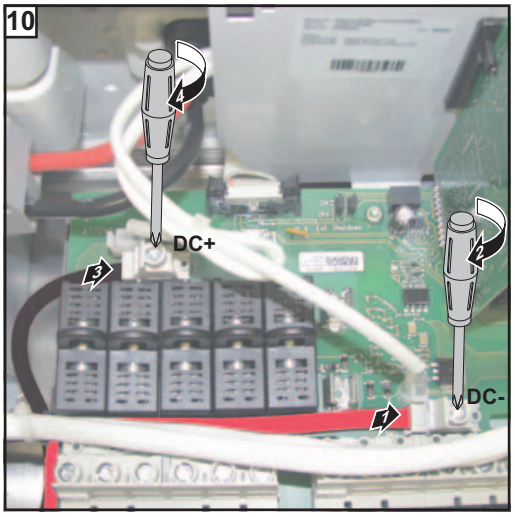

- Connect the red cable to the DC- terminal
- Connect the black cable to the DC+ terninal

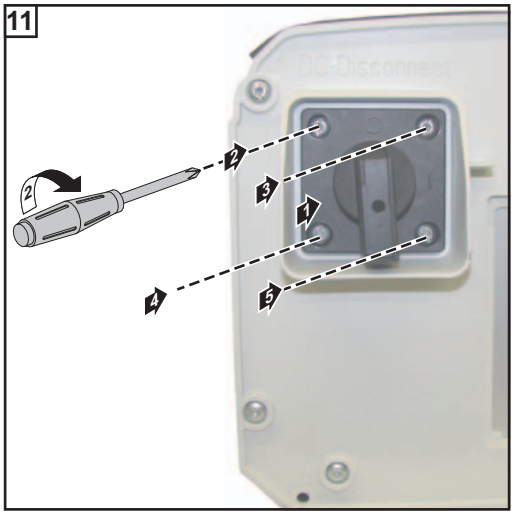

- Insert switch plate and switch knob (1)
- Fix switch plate and switch knob using 4 screws (2-3-4-5)

  Tightening torque: 2.21 ft. lb.

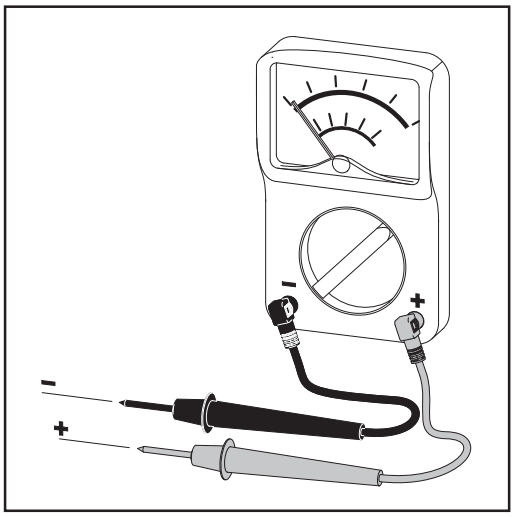

NOTE! Connecting the DC wiring with the wrong polarity may cause damage to the inverter. Check both the polarity and the open circuit voltage!

The DC Voltage must not exceed 600 V, regardless of temperature.

WARNING! An electric shock can be fatal. Danger due to DC voltage from solar modules.
Once solar module strings are connected using connecting distributors, the lower clips of the fuse holders are energized (even with the DC main switch in the off position).
Before commissioning the inverter insert metal slulgs with fuse covers into the fuse holders.

CAUTION! Danger of damaging the inverter by overload.
- Only connect a maximum of 20 A to an individual DC terminal.
- Connect the DC+ wire to the right connection of the inverter's DC terminals.
- Connect the DC- wire to the left connection of the inverter's DC terminals.
- Identify the reversed polarity with (+) and (-) according to step 16

12

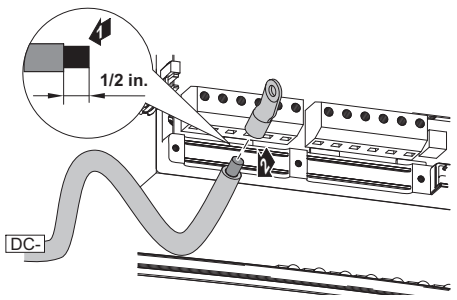

13

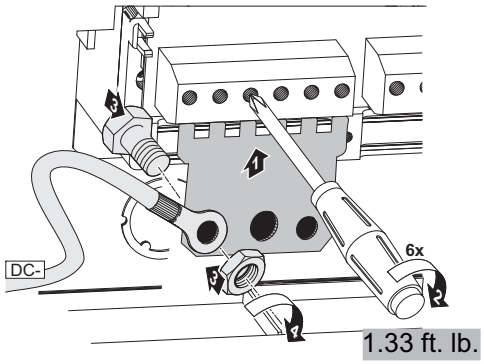

14

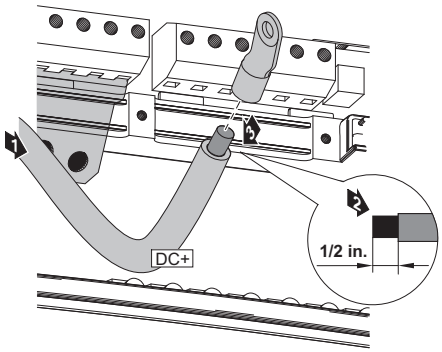

15

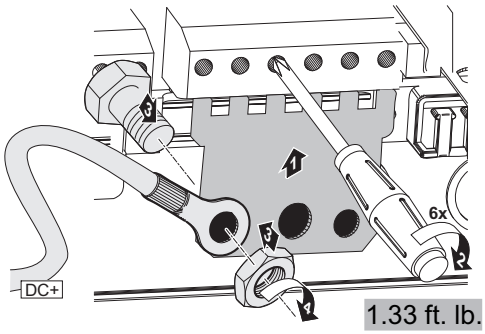

16

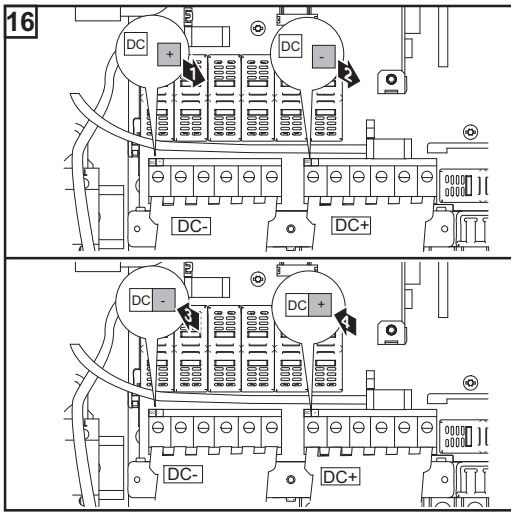

NOTE! Form a min. 4 in. wire loop using all wires.

CAUTION! Danger of damaging the inverter by overload. Before start-up operation make sure that there is a conductive slug in each fuse holder for string fuses.
- Insert conductive slugs only with a fuse cover in the respective fuse holder
- Do not operate the inverter without fuse covers

Criteria for the Proper Selection of String Fuses

DC disconnect requirements

NEC 690.15-18 allows the use of fuse holders as a suitable means of disconnecting PV arrays for servicing.
Additional DC disconnects external to the inverter may be required by the local authority having jurisdiction.

General

The use of string fuses in the inverter also adds fuse protection to the solar modules.
A crucial factor for the fuse protection of solar modules is the maximum short circuit current I_{sc} of the respective solar module.

Criteria for the proper selection of string fuses

The following criteria must be fulfilled for each solar module string when using fuse protection:
- $I_N > 1.56 \times I_{SC}$
- $I_N < 2.00 \times I_{SC}$
- $V_N \geq 600$ V DC
- Fuse dimensions: Diameter 0.41 x 1.38 - 1.50 in. (10.3 x 35 -38 mm)

I_N Nominal current rating of fuse
I_{SC} Short circuit current for standard test conditions (STC) according to solar module data sheet
V_N Nominal voltage rating of fuse

NOTE! The string fuse size must not be greater than the maximum fuse size rating of the PV module as provided on the PV module manufacturers data sheet. If no maximum fuse size is indicated, please contact the PV module manufacturer.

Effects of Using Underrated Fuses

With underrated fuses, the nominal current value may be less than the short circuit current of the solar module.
Effect:
The fuse may trip in intensive lighting conditions.

Fuse Recommendations

NOTE! Only select fuses suitable for a voltage of 600 V DC.

You should only use the following fuses, which have been tested by Fronius, to ensure problem-free fuse protection:
- Littelfuse KLKD fuses
- Cooper Bussmann PV fuses

Fronius shall not be liable for any damage or other incidents resulting from the use of other fuses. In addition, all warranty claims are forfeited.

Application example

Example: Maximum short circuit current (I_{SC}) of the solar module = 5.75 A

According to the criteria for selecting the correct fuse, the fuse must have a nominal current greater than 1.56 times the short circuit current:
5.75 A x 1.56 = 8.97 A

The fuse that should be selected according to the ‘Fuses’ table:
KLK D 9 with 9.0 A and 600 V AC / DC

Fuses

Nominal current	Fuse	Nominal current	Fuse
4.0 A	KLK D 4	9.0 A	KLK D 9
5.0 A	KLK D 5	10.0 A	KLK D 10
6.0 A	KLK D 6	12.0 A	KLK D 12
7.0 A	KLK D 7	15.0 A	KLK D 15
8.0 A	KLK D 8	20.0 A	KLK D 20

'Fuses' table: Extract of suitable fuses, e.g. Littelfuse fuses

Attaching power stage sets and closing the Inverter

Preparation

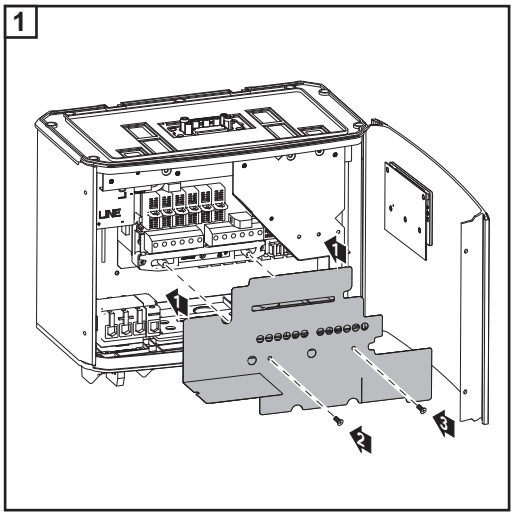

Attaching power stage sets and closing the Inverter

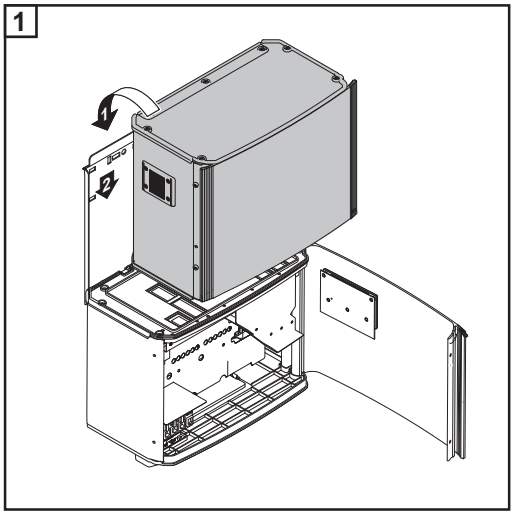

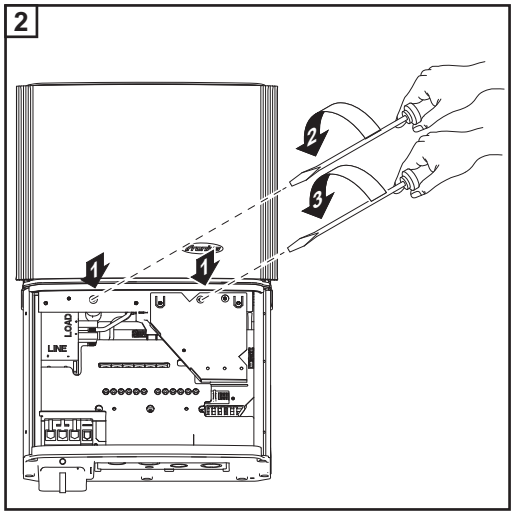

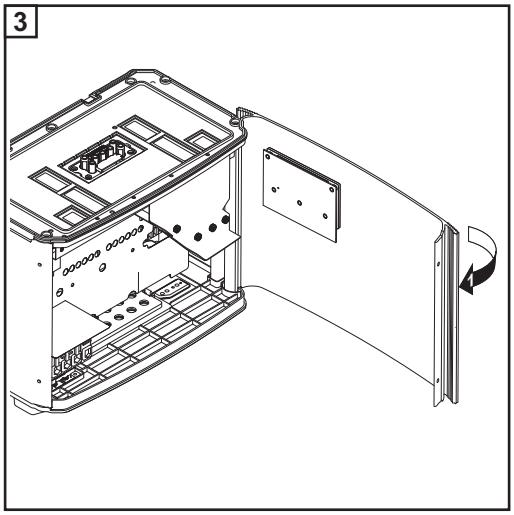

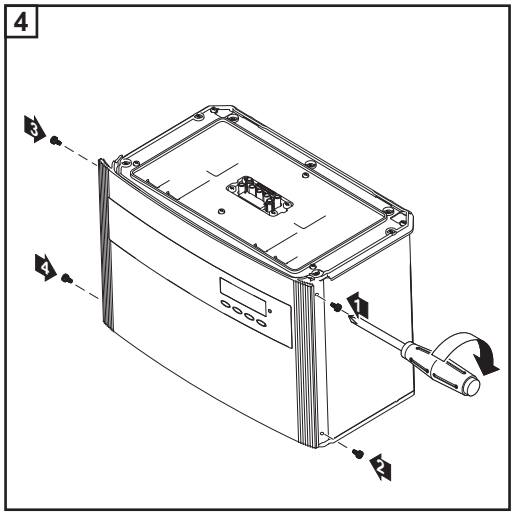

The inverter is now operational.

Commissioning

Factory pre-set configuration

The inverter has been pre-configured in the factory and is ready for operation. You only have to set the available power grid for startup.

To change your inverter settings, please see section ‘The setup menu’ in the chapter ‘Operation.’

Requirements for start-up operation

- Inverter connected to the public grid (AC)
- Inverter connected to solar modules (DC)
- 3 plastic dividers inserted
- 2 metal covers mounted
- Power stage set mounted

NOTE! Do not operate the inverter without fuse covers.

Commissioning

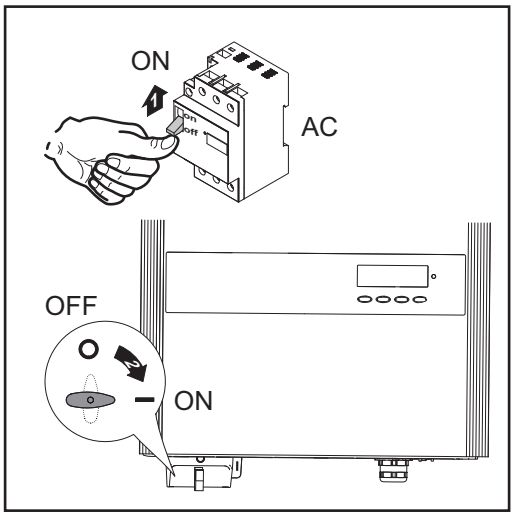

1 Turn on AC disconnect

2 Flip DC main switch to position - 1 -

As soon as the photovoltaic modules produce sufficient power, the Operating Status LED lights up orange.

The orange LED indicates that the feed-in mode of the inverter will begin shortly.

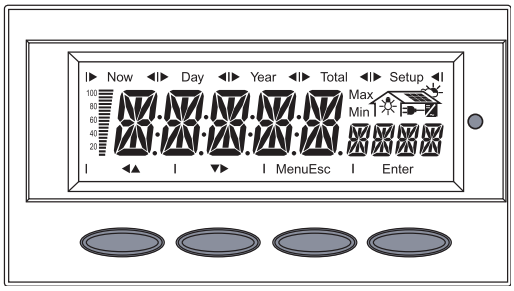

The screen displays the startup phase.

- Segment test
  All display elements light up for about one second.

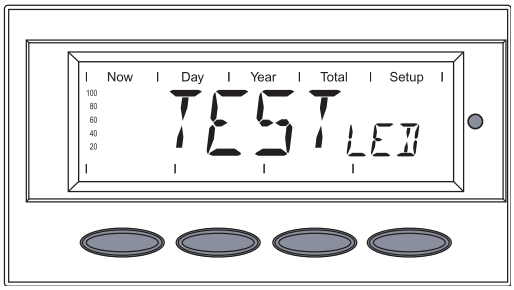

- The inverter goes through a master check list for several seconds.
  The display shows ‘TEST’ and indicates the respective component that is being tested (for example, ‘LED’).

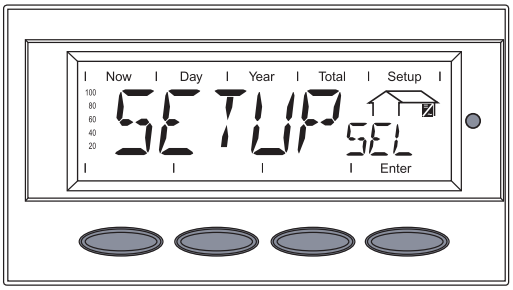

- The grid selection phase begins: 'SETUP SEL' is shown.

3 Press the ‘Enter’ key

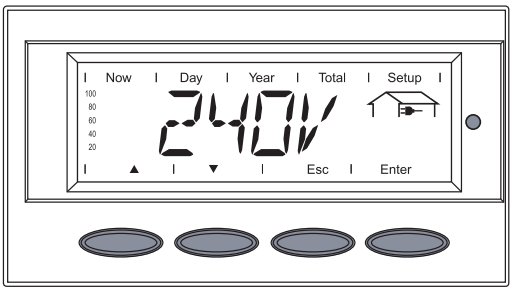

The first grid selection option is shown (e.g., 240 V).

4 Select the grid

Selecting the grid

Several grid selection options are displayed depending on the product type (see also section 'Connecting the Inverter to the public grid’).

1 Use the ‘Up’ and ‘Down’ keys to select the desired grid:
▲ ▼

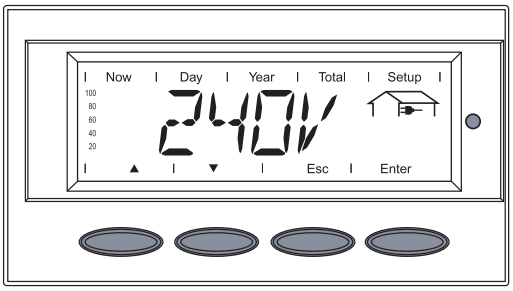

Grid voltage 240 V Delta
No neutral conductor in the system
Neutral conductor monitoring is deactivated

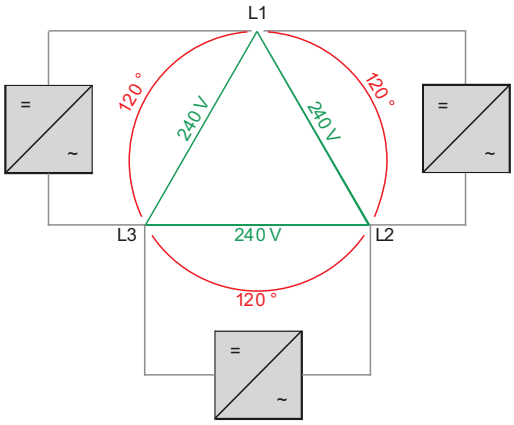

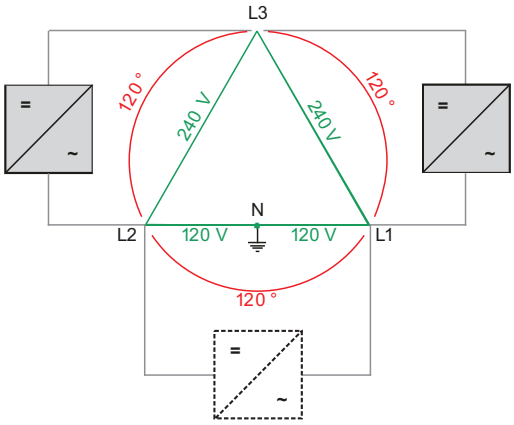

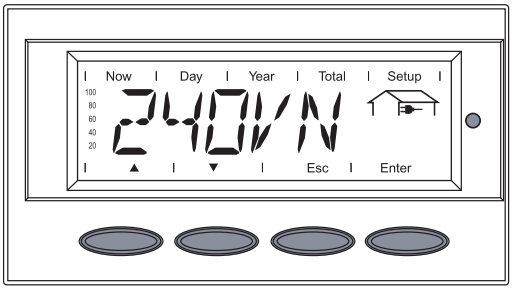

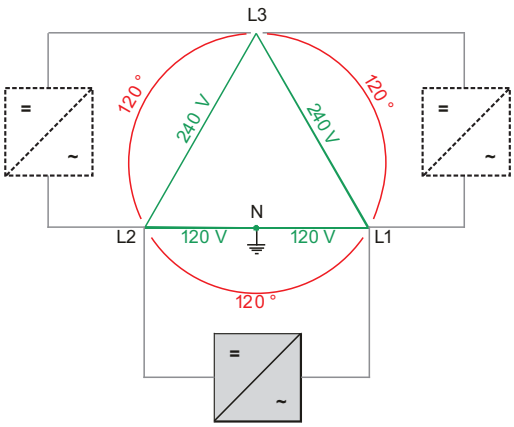

Grid voltage 240 V: 120 V Stinger
Neutral conductor available in the system
Neutral conductor monitoring is activated

Grid voltage 240 V: 120 V Split Phase
Neutral conductor available in the system
Neutral conductor monitoring is activated

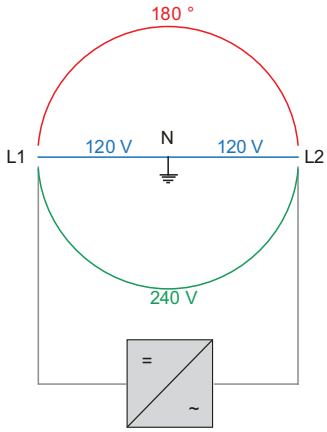

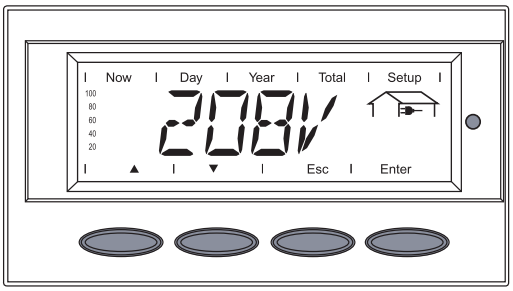

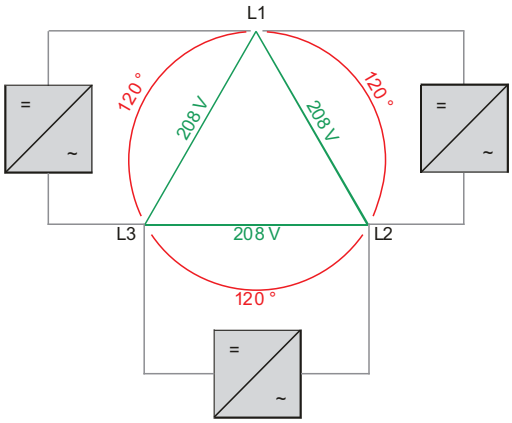

Grid voltage 208 V Delta
No neutral conductor in the system
Neutral conductor monitoring is deactivat-
ed

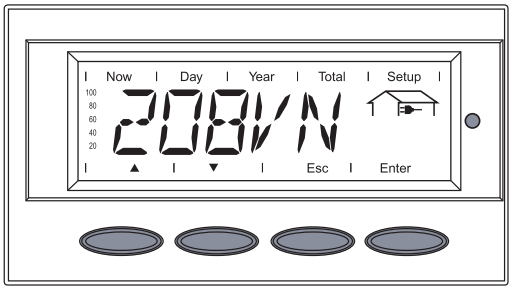

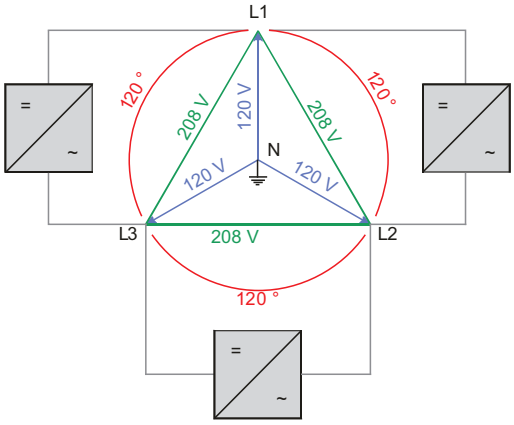

Grid voltage 208 V Delta: 120 V WYE
Neutral conductor available in the system
Neutral conductor monitoring is activated

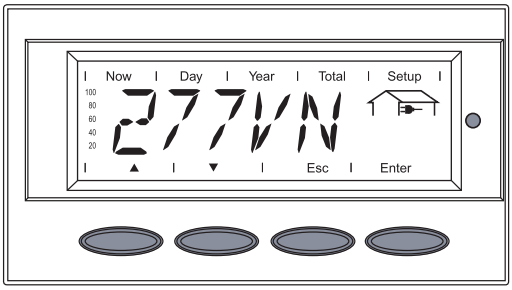

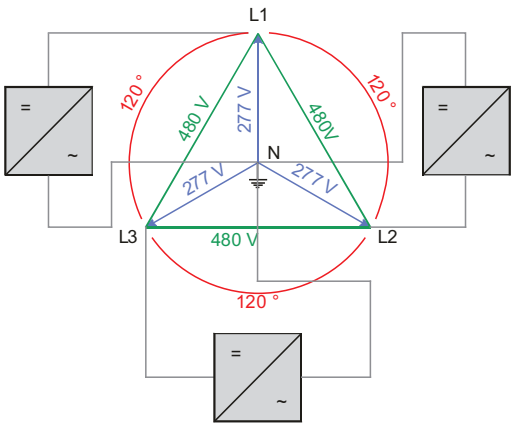

Grid voltage 480 V Delta: 277 V WYE
Neutral conductor available in the system
Neutral conductor monitoring is activated

2 Press the 'Enter' key 2x to confirm your grid selection (or use the 'Esc' key to return to grid selection)

The startup phase restarts with the segment test.

Startup phase during startup operation

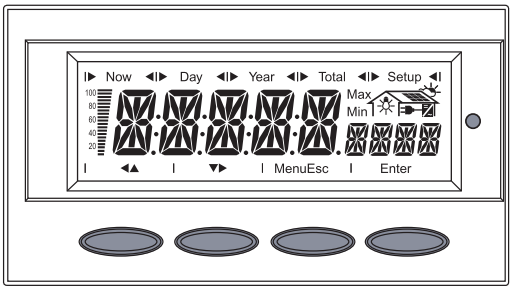

- Segment test
  All display elements light up for about one second.

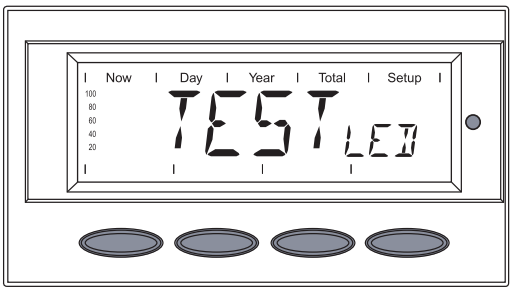

- The inverter goes through a master check list for several seconds.
  The display shows ‘TEST’ and indicates the respective component that is being tested (for example, ‘LED’)

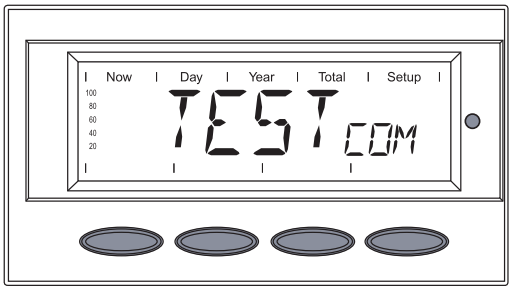

- ‘TEST COM’ is shown.

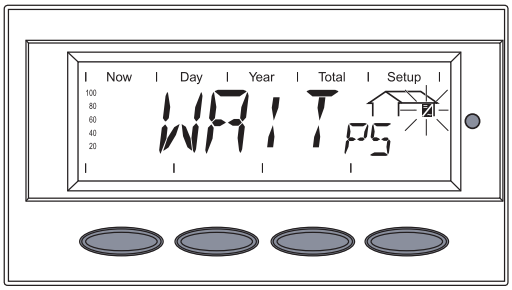

- Synchronization with grid:
  ‘WAIT PS’ is displayed, the inverter icon flashes: the inverter is waiting for all power stage sets in the network to be on stand-by. This procedure takes place dependent on the DC voltage.

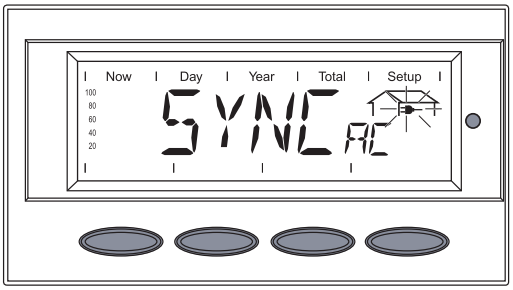

- Next, the display shows ‘SYNC AC,’ the grid icon flashes.

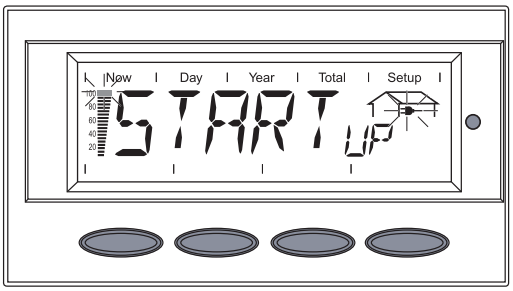

- Startup test:
  Before the inverter starts feeding energy into the grid, the conditions of the grid are tested in detail in accordance with local regulations. The display shows ‘START UP.’

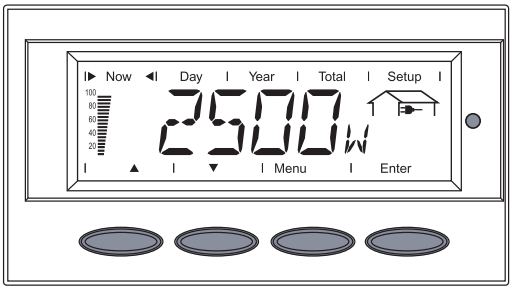

- Operation of feeding energy into the grid:
  After selecting the grid and when the tests are concluded, the inverter starts feeding energy into the grid.
  The display shows the present power feeding into the grid.
  The Operating Status LED lights up green, and the inverter starts operating.

IMPORTANT! For more information about the startup phase, please see the chapter 'Operation', section 'Product description Fronius IG Plus' (Startup Phase, Test Procedure).

⚠ POSITIVE GROUNDED SOLAR MODULES ⚠

Setting inverter for solar module ground at the positive pole

If the inverter will be operated with solar modules that require a solar module ground at the positive pole, the corresponding grounding method must be set in the ‘Basic Service’ menu.
A 5-digit code is required for accessing the ‘Basic Service’ menu. This access code will be provided by Fronius upon request.

If solar modules are connected to the inverter that require a solar module ground at the positive pole, the status message 472 "Ground fault detected" will be displayed after the inverter is turned on and the startup phase is completed.

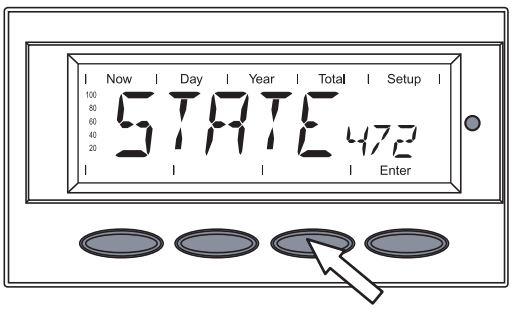

1 Press the unoccupied ‘Esc’ key 5 x

⚠ POSITIVE GROUNDED SOLAR MODULES ⚠

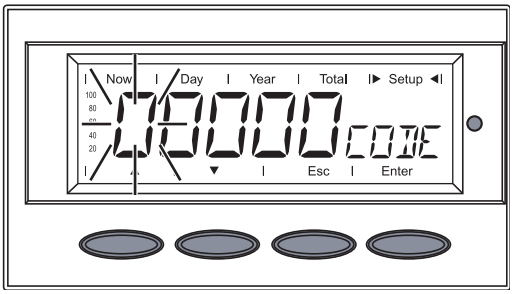

'CODE' is displayed, the first digit flashes.

2 Use the 'Up' and 'Down' keys to select a value for the first digit of the access code
▲ ▼

3 Press the 'Enter' key

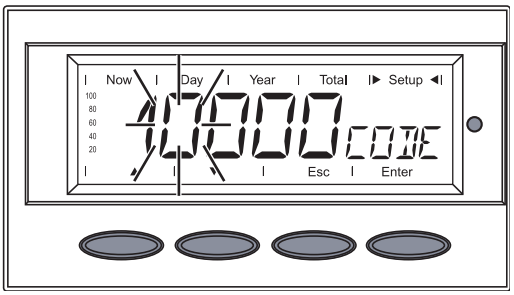

The second digit flashes.

4 Use the 'Up' and 'Down' keys to select a value for the second digit of the access code
▲ ▼

5 Press the 'Enter' key

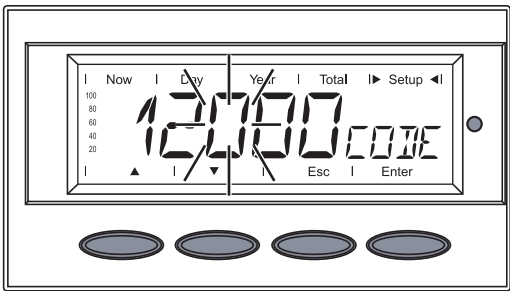

The third digit flashes.

6 Use the 'Up' and 'Down' keys to select a value for the third digit of the access code
▲ ▼

7 Press the 'Enter' key

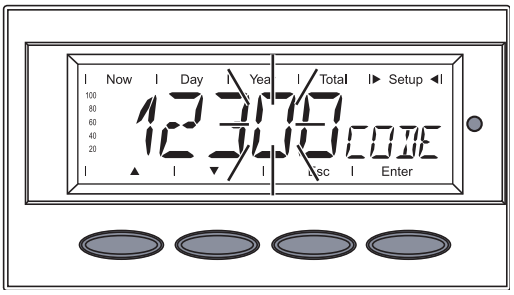

The fourth digit flashes.

8 Use the 'Up' and 'Down' keys to select a value for the fourth digit of the access code
▲ ▼

9 Press the 'Enter' key

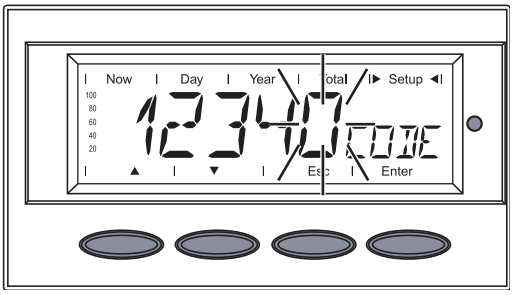

The fifth digit flashes.

10 Use the 'Up' and 'Down' keys to select a value for the fifth digit of the access code
▲ ▼

11 Press the 'Enter' key

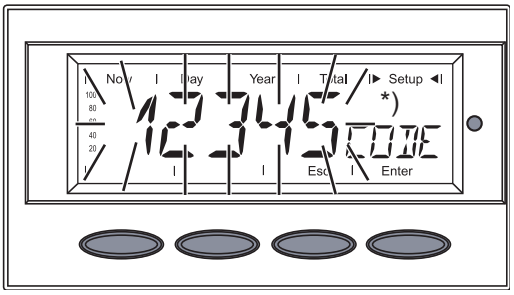

The access code flashes.
*) ... Code example

12 Press the 'Enter' key

The inverter is now in the 'Basic Service' menu, the first parameter is displayed:
- 'MIX MODE' for multiphase inverters
- 'DC MODE' for single-phase inverters

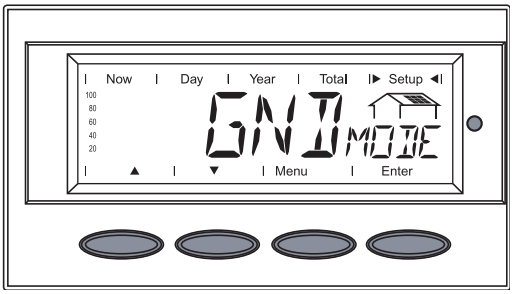

13 Use the ‘Up’ and ‘Down’ keys to select the ‘GND MODE’ parameter
▲ ▼

14 Press the ‘Enter’ key

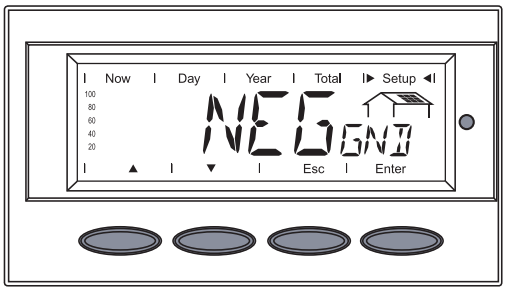

The set grounding method is displayed.

15 Use the ‘Up’ and ‘Down’ keys to select the corresponding ‘POS GND’ grounding method:
▲ ▼

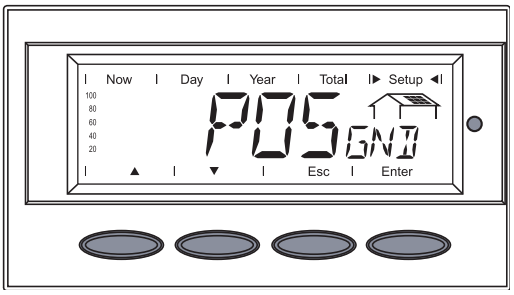

POS = solar module ground at the positive pole

16 Press the ‘Enter’ key to apply the required grounding method

17 Press the ‘Esc’ key to exit the ‘Basic Service’ menu

Inserting Option Cards

Passende Optionskarten

There are several options and system upgrades available for the inverter, e.g.:
- Datalogger and modem interface, Ethernet/Internet connection (for using a PC to record and manage data from your photovoltaic system)
- Various large displays (Fronius Public Display)
- Fronius Personal Display
- Fronius Datamanager
- Fronius Modbus Card

System upgrades are available as plug-in cards and as external boxes. The Fronius IG Plus A is designed for one option card.

Safety

WARNING! An electric shock can be fatal. Danger from grid voltage and DC voltage from solar modules.
- The connection area should only be opened by a licensed electrician.
- Never work with live wires! Prior to all connection work, make sure that the AC and DC wires are not charged.
- All electrical installations must be carried out in accordance with the National Electrical Code, ANSI/NFPA 70, and any other codes and regulations applicable to the installation site.
- For installations in Canada, the installations must be done in accordance with applicable Canadian standards.

WARNING! An electric shock can be fatal. Danger from residual voltage from capacitors.

You must wait until the capacitors have discharged. Discharge takes 5 minutes.

NOTE! Follow general ESD precautions when handling option cards.

Opening the inverter

When adding option cards to the inverter, please follow all inverter safety instructions and information before opening the inverter.

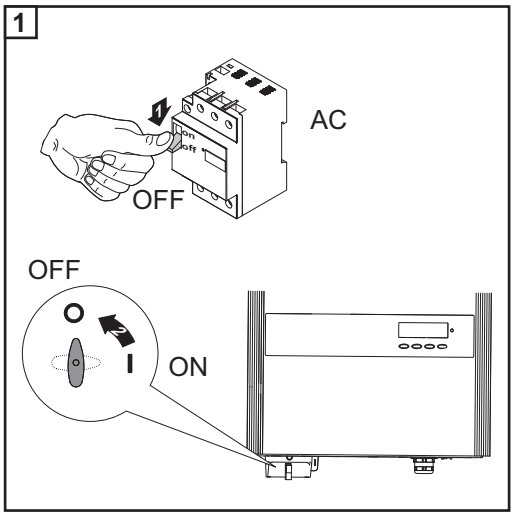

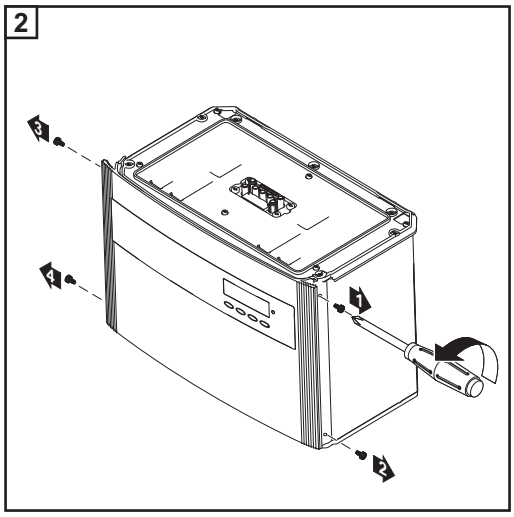

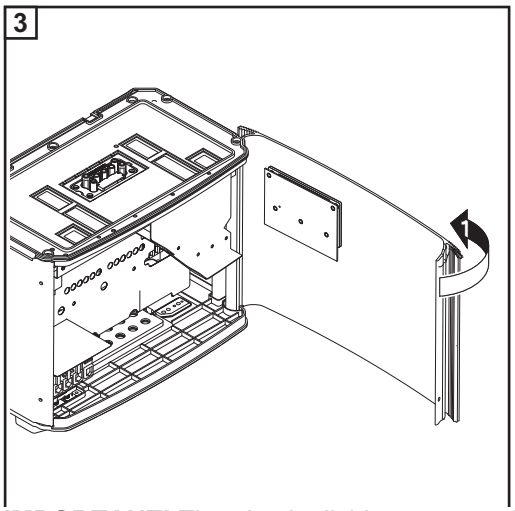

IMPORTANT! The plastic dividers are used to separate the data communication wires from the AC and DC wires:

- Data communication wires must be laid above the plastic dividers
- AC and DC wires are laid under the plastic dividers

Make sure that the plastic dividers are present.

Inserting option cards into the inverter

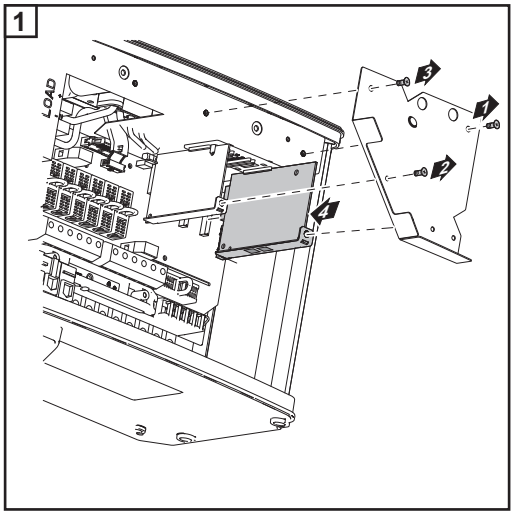

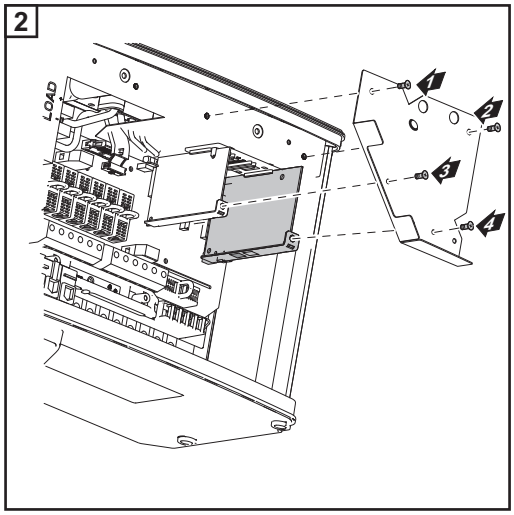

Termination plug when networking several DATCOM components

IMPORTANT! When networking several DATCOM components, a termination plug must be placed on each free IN and/or OUT connection of a DATCOM component.

Connecting option cards, laying data communication wires

CAUTION! Danger of short circuit by loose metal parts from knockouts. Loose metal parts in the inverter may cause short circuits when the inverter is powered up. When removing knockouts, make sure that
- no loose metal parts fall into the inverter
- any metal pieces that do fall into the inverter are removed immediately

NOTE! The knockout for the data communication wires must be above the plastic dividers so that the plastic dividers are always under the data communication wires.

NOTE! Use only water tight conduit fittings and conduits. Conduit fittings and conduits are not part of the scope of supply for the inverter.

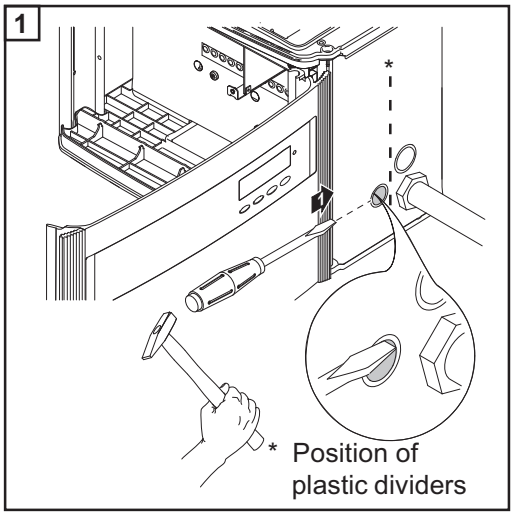

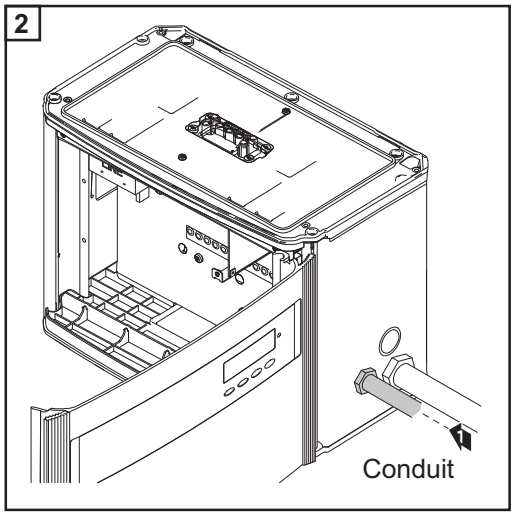

NOTE! Before connecting data communication wires to an option card, lead the wires through the ferrite delivered with the inverter and build a loop.

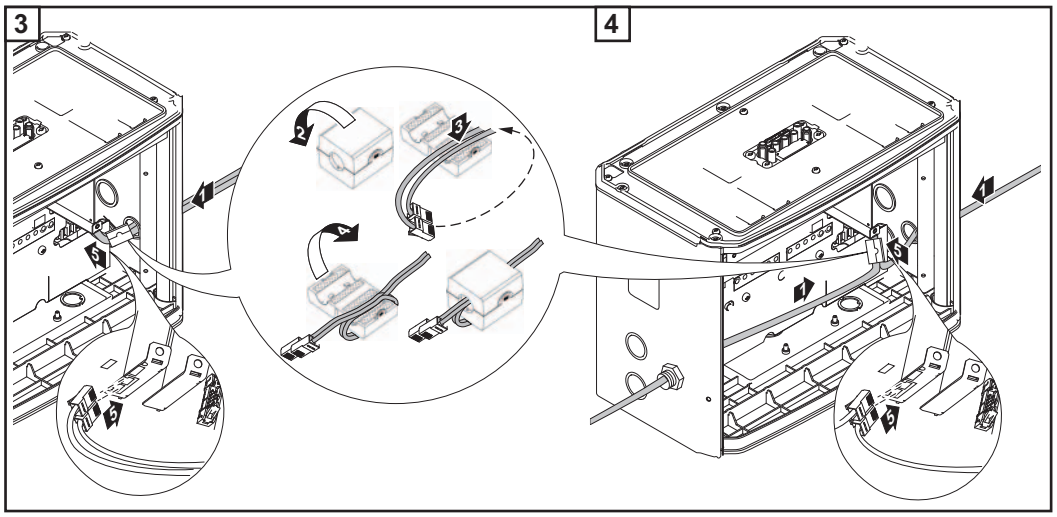

3 = one wire input for both data communication wires

4 = separated wire inputs on opposite sides (e.g., when several inverters are installed next to each other)

Closing the inverter

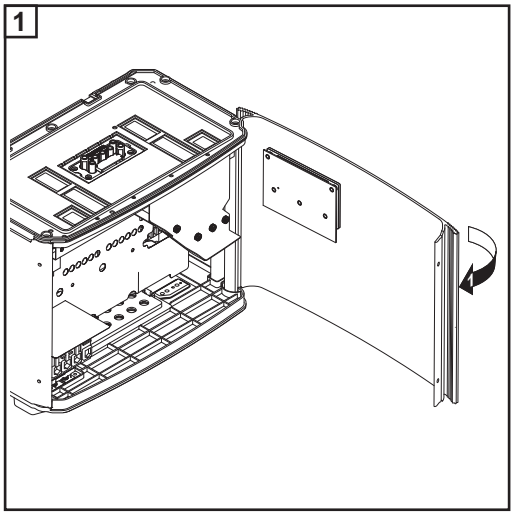

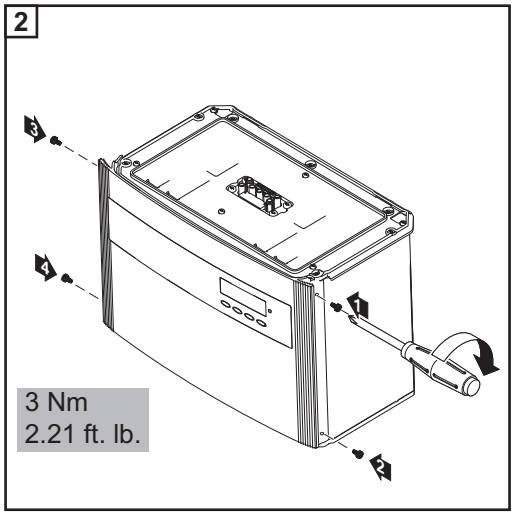

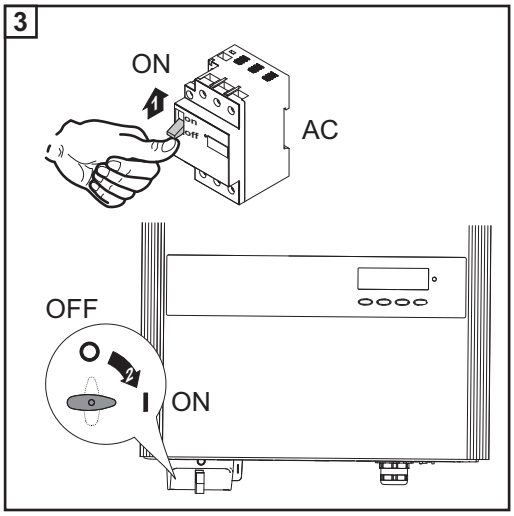

Data Communication and Solar Net

Solar Net and data interface

Fronius developed Solar Net to make these add-on system components flexible and capable of being used in a wide variety of different applications. Solar Net is a data network that enables several inverters to be linked with the data communications components.

Solar Net is a bus system. A single cable is all that is required for one or more inverters to communicate with all system upgrade components.

The core of the Solar Net is the Fronius Datalogger. It coordinates data transmissions and ensures that even large volumes of data are distributed quickly and securely.

The 'Fronius Com Card' is used to integrate the inverter into Solar Net.

Important Every inverter that is to be monitored using a Datalogger requires a 'Fronius Com Card.' In this case, the 'Fronius Com Card' serves as a link between the internal network of the inverter and the Solar Net interface of the Datalogger.

Important Each inverter can have only one 'Fronius Com Card.' A network may only contain one Fronius Datalogger.

The first inverter with a 'Fronius Com Card' can be positioned up to 3280 ft. (1000 m) away from the last inverter with a 'Fronius Com Card.'

Different system upgrades are detected automatically by Solar Net.

In order to distinguish among several identical system upgrades, each one must be assigned a unique number.

In order to uniquely identify each inverter in Solar Net, each inverter must also be assigned an individual number.
You can assign individual numbers as per 'The setup menu' section in this manual.

More detailed information on the individual data communications components can be found in the relevant operating instructions or on the Internet at http:\\www.fronius-usa.com.

Example

Logging and archiving inverter and sensor data using a Fronius Datalogger and Fronius Sensor Box:

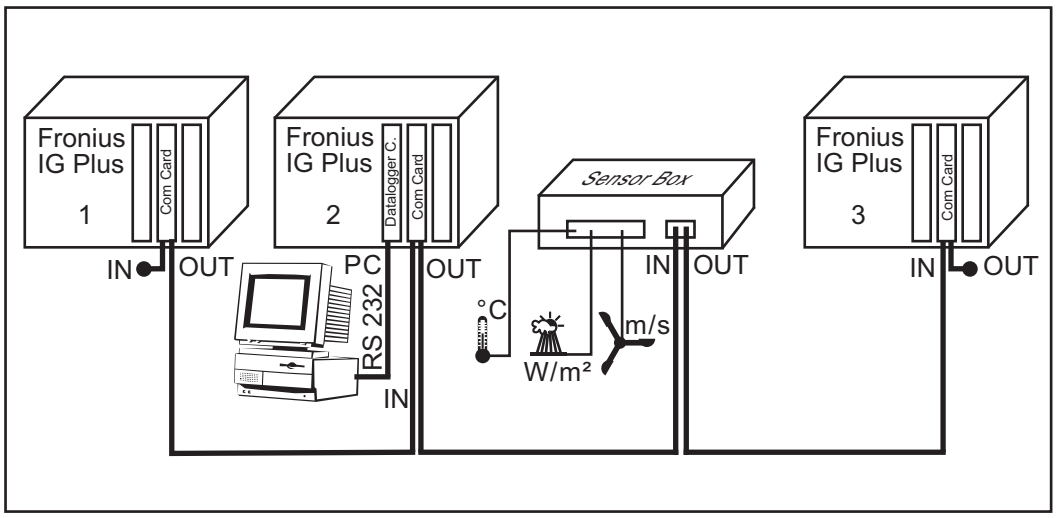

= Terminating plug

Illustration explanation: Data network with 3 Fronius IG Plus units and one Fronius Sensor Box:

- all Fronius IG Plus units have one 'Fronius COM Card'
- one Fronius IG Plus has a 'Fronius Datalogger Card' (no. 2)
- Fronius Datalogger has a USB-interface and two RS-232 interfaces for connecting to a PC and a modem

Option cards communicate within the Fronius IG Plus via its internal network. External communication (Solar Net) takes place via the 'Fronius Com Cards.' Each 'Fronius Com Card' is equipped with two RS485 interfaces - an input and an output. RJ45 plug connectors are used to connect to these cards.

Selecting the interface protocol and setting the inverter baud rate

General

If a data communication connection is required between the inverter and other Fronius data communication components, the ‘Interface protocol’ must be set in the ‘Basic Service’ menu.
The following 5-digit access code must be entered to access the ‘Basic Service’ menu: 22742

Entering the access code

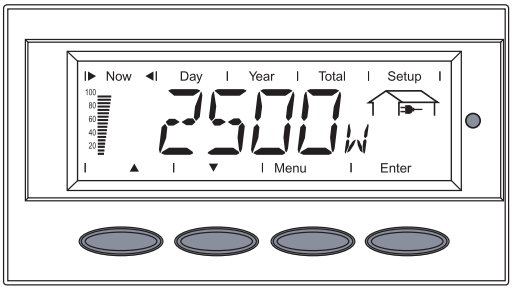

1 Press the ‘Menu’ key

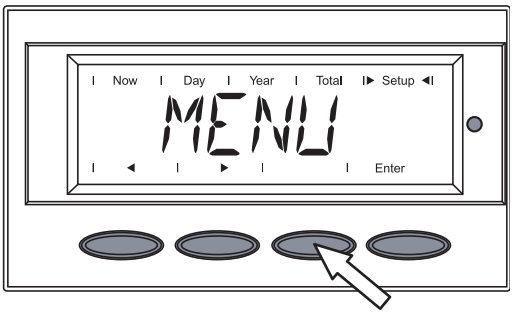

‘Menu’ is shown.

2 Select the ‘Setup’ mode using the ‘Left’ or ‘Right’ keys
◀ ▶

3 Press the unoccupied ‘Menu/Esc’ key 5 x

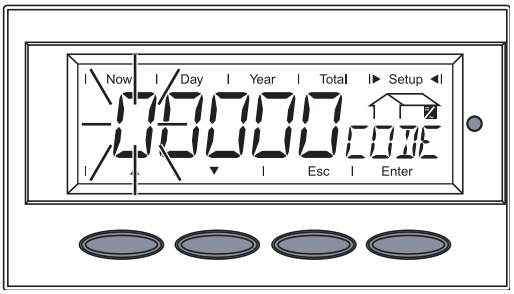

‘CODE’ is displayed, the first digit flashes.

4 Enter the access code 22742:

Use the ‘Up’ and ‘Down’ keys to select a value for the first digit of the access code
▲ ▼

5 Press the ‘Enter’ key

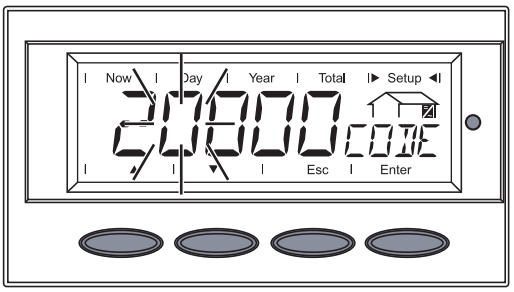

The second digit flashes.

6 Repeat steps 4 and 5 for the second, third, fourth and fifth digit of the access code until ...

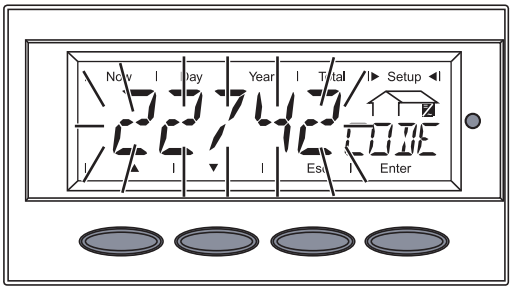

... the access code flashes.

14 Press the ‘Enter’ key

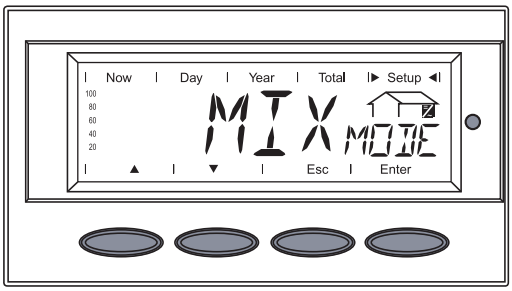

The inverter is now in the ‘Basic Service’ menu, the first parameter is displayed:

‘MIX MODE’ for multiphase inverters

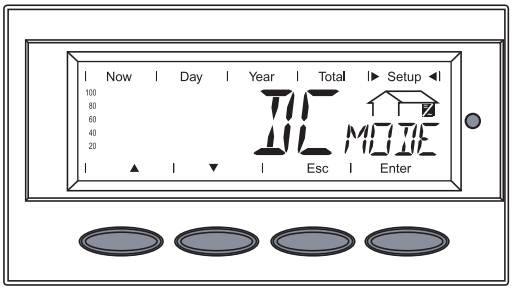

‘DC MODE’ for single-phase inverters

Selecting the interface protocol for communication with other data communication components

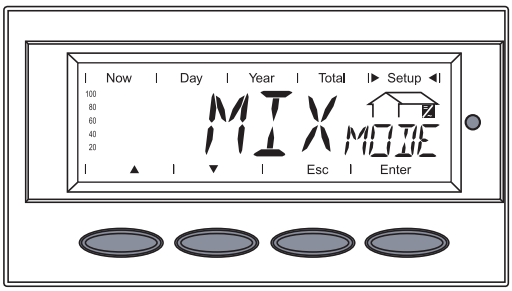

The inverter is in the ‘Basic Service’ menu, the first parameter is displayed:

‘MIX MODE’ for multiphase inverters

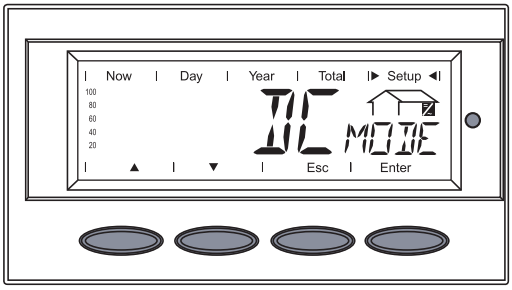

‘DC MODE’ for single-phase inverters

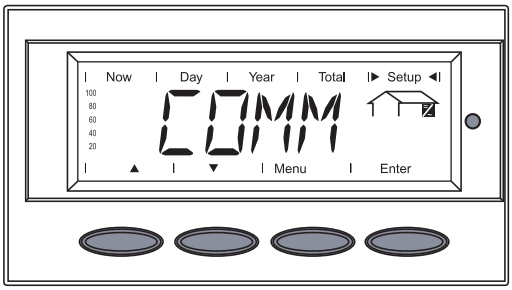

1 Use the ‘Up’ and ‘Down’ keys to select the ‘COMM’ parameter
▲ ▼

2 Press the ‘Enter’ key

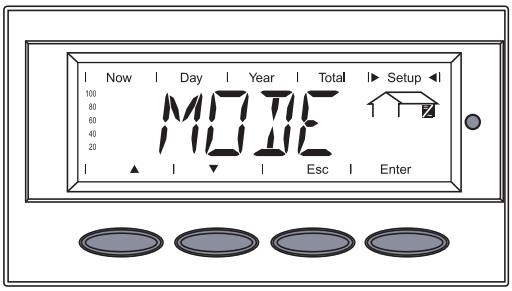

‘MODE’ is shown.

3 Press the ‘Enter’ key

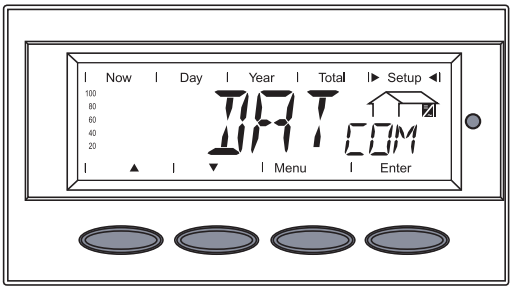

The set protocol type is displayed.

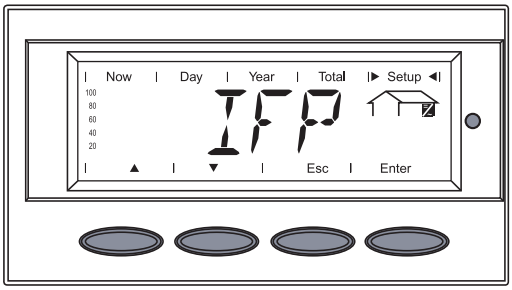

4 Use the ‘Up’ and ‘Down’ keys to select the ‘IFP’ protocol type (interface protocol):
▲ ▼

5 Press the ‘Enter’ key to apply the ‘IFP’ protocol type.

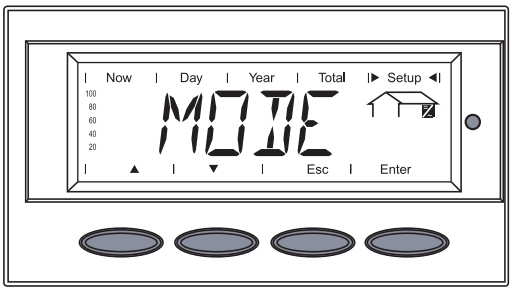

The ‘IFP’ protocol type is applied, ‘MODE’ is displayed.

For setting the inverter baud rate without exiting the ‘Basic Service’ menu follow the steps in the enclosed section ‘Setting the Inverter baud rate’, starting from step 3.

6 Press the ‘Esc’ key 2 x to exit the ‘Basic Service’ menu

Setting the inverter baud rate

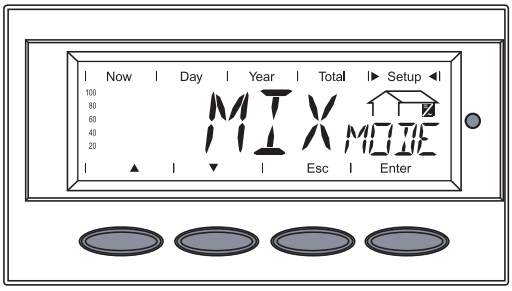

The inverter is in the ‘Basic Service’ menu, the first parameter is displayed:

‘MIX MODE’ for multiphase inverters

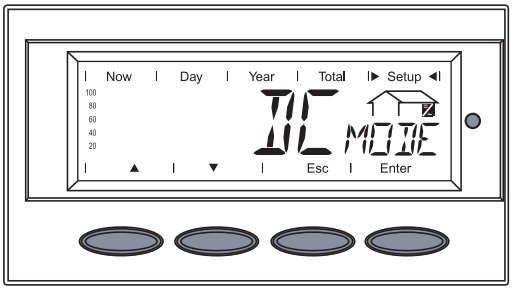

‘DC MODE’ for single-phase inverters

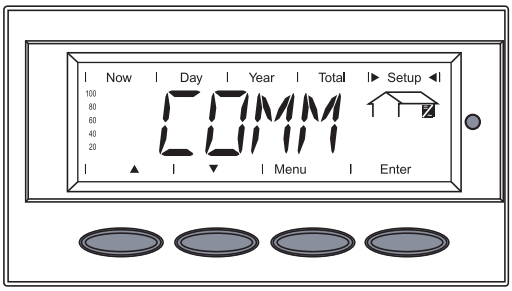

1 Use the ‘Up’ and ‘Down’ keys to select the ‘COMM’ parameter
▲ ▼

2 Press the ‘Enter’ key

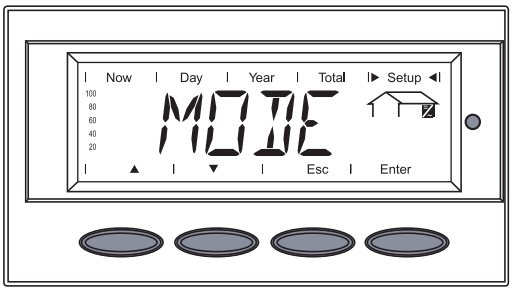

‘MODE’ is shown.

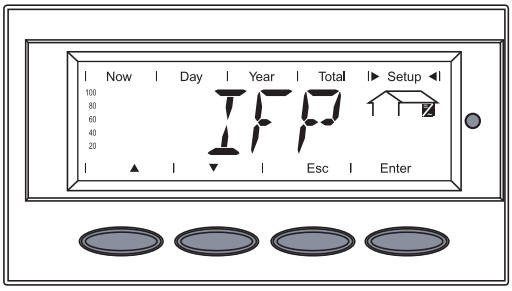

3 Use the ‘Up’ and ‘Down’ keys to select the ‘IFP’ parameter
▲ ▼

4 Press the ‘Enter’ key

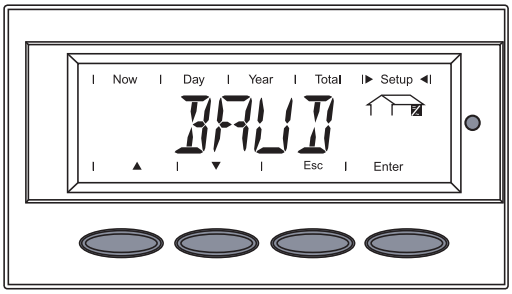

‘BAUD’ is displayed

5 Press the ‘Enter’ key

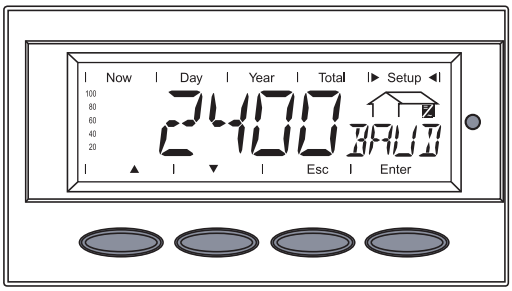

The set baud rate is displayed.

6 Use the ‘Up’ and ‘Down’ keys to select the desired baud rate:
2400 / 4800 / 9600 / 14400 / 19200
▲ ▼

7 Press the ‘Enter’ key

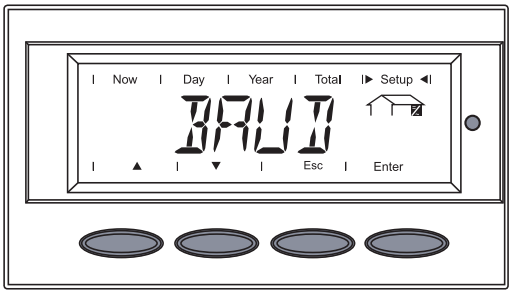

The selected baud rate is applied, ‘BAUD’ is displayed.

8 Press the ‘Esc’ key 3 x to exit the ‘Basic Service’ menu

The inverter begins the startup phase after exiting the ‘Basic Service’ menu.

Product description

Controls and Indicators

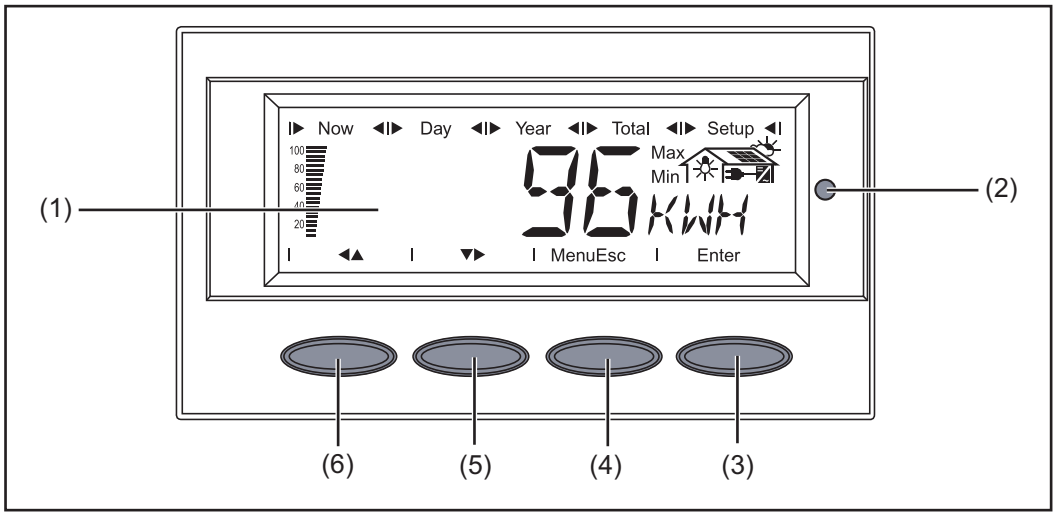

Item	Function
(1)	Display for displaying values, settings and menus
(2)	Operating Status LED for displaying the operating status
(3)	"Enter" key for confirming a selection
(4)	"Menu / Esc" key for scrolling through menu options for exiting the Setup menu
(5)	"Down/Right" key depending on the selection: for navigating down for navigating right
(6)	"Left/Up" key depending on the selection: for navigating left for navigating up

Display

The display unit's power is supplied via the safety-low voltage of the solar modules, which means that the display unit can be used only in the daytime.

IMPORTANT! The inverter display is not a calibrated measuring instrument. A slight inaccuracy of a few percent is intrinsic to the system. A calibrated meter will be needed to make calculations for the power supply company.

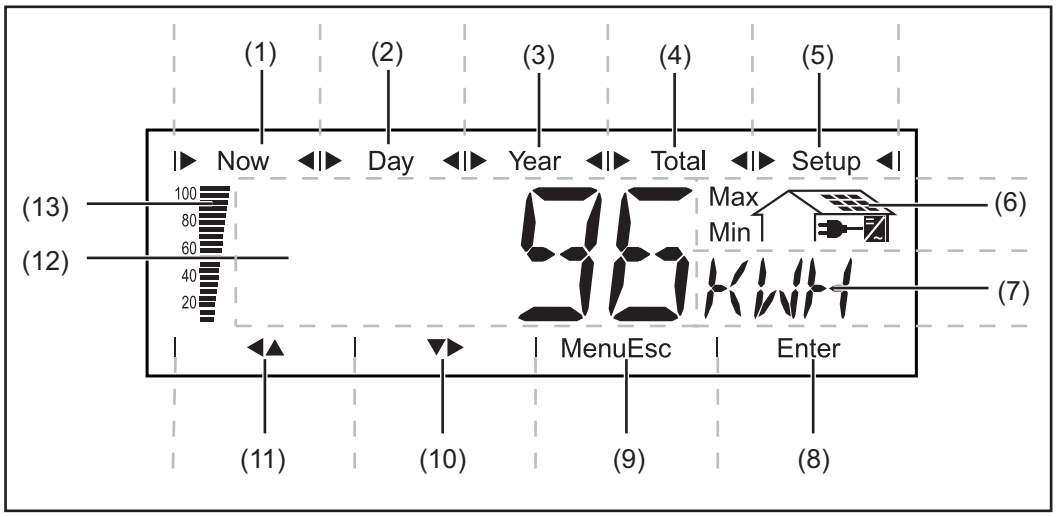

Item	Function
(1)	Icons for the "Now" display mode
(2)	Icons for the "Day" display mode
(3)	Icons for the "Year" display mode
(4)	Icons for the "Total" display mode
(5)	Icons for the "Setup" display mode
(6)	Icons for operating conditions

Max — The value shown represents the maximum value within the period of observation (depending on which display mode is selected).

Min — The value shown represents the minimum value within the period of observation (depending on which display mode is selected).

Important The minimum and maximum values displayed do not represent the absolute extreme values, because data are recorded only at two-second intervals.

... appears when values are displayed which are directly associated with the solar modules

... appears when values are displayed which are directly associated with the public grid

... appears with data readings that are directly related to the inverter

(7)	Range for display unit for displaying the applicable measuring unit
(8)	Icon for the "Enter" key

Item	Function
(9)	Icons for the "Menu/Esc" key
(10)	Icons for the "Down/Right" key
(11)	Icons for the "Left/Up" key
(12)	Range for display value for displaying the value
(13)	Output bar (not active during setup) indicates the output power fed into the grid at a given moment - regardless of the display mode chosen. The screen displays % of the maximum possible output power of your solar inverter

Operating Status LED

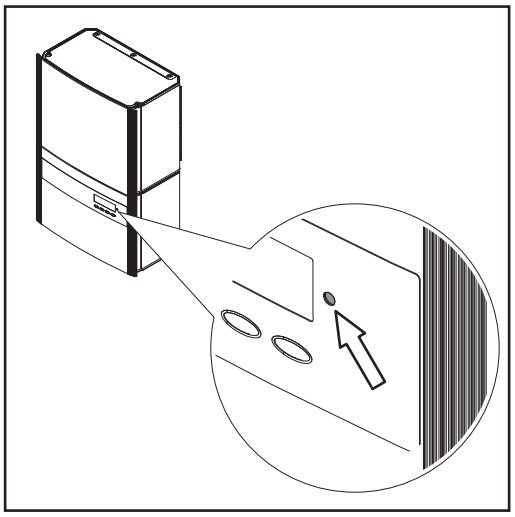

Position of Operating Status LED on the inverter

Depending on the operating status, the Operating Status LED assumes different colors:

Operating Status LED	Explanation
Steady green	The LED stays lit after the automatic startup phase of the inverter as long as power is being fed into the grid. It indicates problem-free operation of the photovoltaic system.
Flashing green	The photovoltaic system is working correctly, a status code is on the display. When a status code is shown, rectify the relevant condition by going to the "Maintenance and Service" chapter, "Status Diagnosis and Troubleshooting" section. The status code can be acknowledged by pressing the "Enter" key.
Steady orange	The inverter enters an automatic startup phase as soon as the solar modules are delivering sufficient power after sunrise.
Flashes orange	A warning is shown on the display or the inverter has been set to standby operation in the Setup menu (= manual shutoff of operation). The next day, operation will resume automatically. During the time the LED flashes orange, operation can be resumed manually at any time (see section "The Setup Menu")
Steady red	General status: the respective status code is shown on the screen
Remains dark	There is no connection to the solar modules, no solar module power due to darkness.

A list of most status codes, the corresponding status information, their status causes and repair measures can be found in the chapter "Troubleshooting and Maintenance," section "Status Diagnosis and Troubleshooting."

Startup Phase and Grid Feed-in Mode

Startup phase

The inverter carries out a self test after being turned on automatically. Then a test of the public grid is carried out. This test takes five minutes. During the startup sequence the illumination of the Operating Status LED is yellow.

Test procedure

1. Segment test
   All display elements light up for about one second

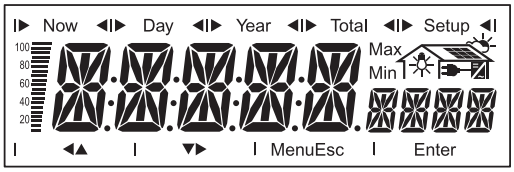

2. Self test of essential inverter components
   - The inverter goes through a master check list for several seconds
   - The display shows ‘TEST’ and indicates the respective component that is being tested (for example, ‘LED’)

3. Synchronization with grid:
   - ‘WAIT PS’ is displayed, the inverter icon flashes: The inverter is waiting for all power stage sets in the network to be on stand-by. This procedure takes place dependent on the DC voltage

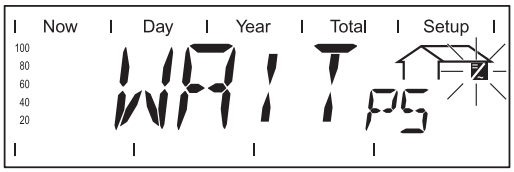

   - Next, the display shows ‘SYNC AC,’ the grid icon flashes.

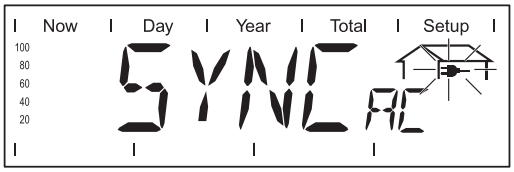

4. Startup test
   - Before the inverter starts feeding energy into the grid, the conditions of the grid are tested in accordance with local regulations.
   - The display shows ‘START UP.’

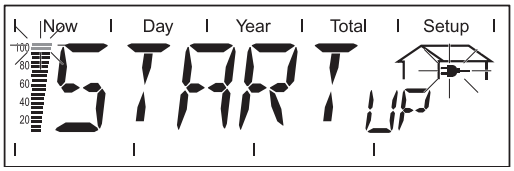

The startup test takes five minutes. The time elapsed is indicated by a bar shrinking from the top down.

Whenever two scale divisions stop flashing and disappear, 1/10 of the total duration of the test is over.

Operation of Feeding Energy into the Grid

- Once the tests have been completed, the inverter starts feeding power into the grid.
- The display shows the present power feeding into the grid.
- The Operating Status LED lights up green, and the inverter starts operating.

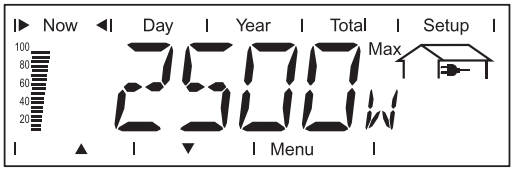

Navigation in the Menu Level

Activating display illumination

1 Press any key

The display illumination is activated.

If no key is pressed for 30 seconds, the display backlight goes out (provided that the display illumination is set to automatic in the Setup menu).

The Setup menu also offers a choice between a permanently lit or permanently dark display.

Accessing the Menu Level

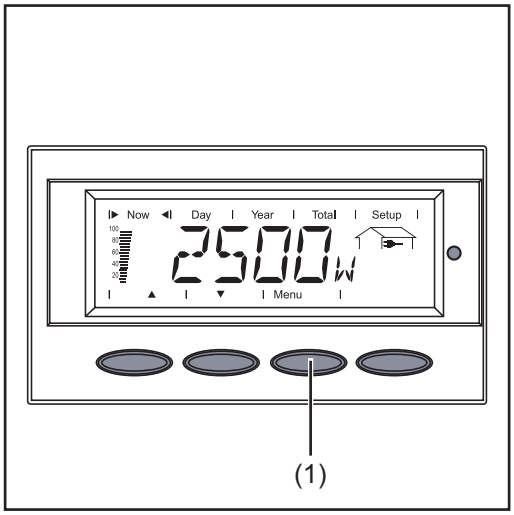

1 Press the "Menu" key (1)

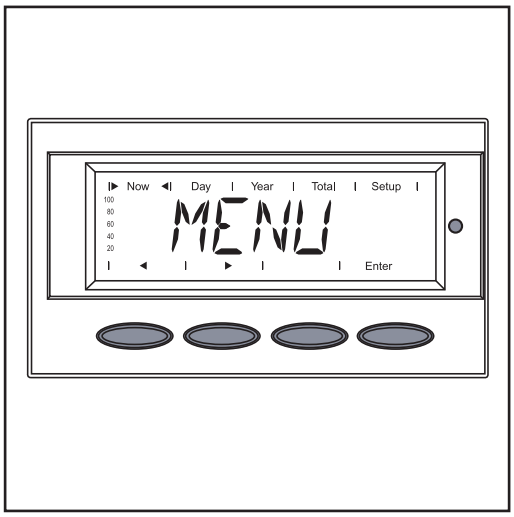

"Menu" will appear on the display

The inverter is now in the menu level.

From the menu level you can
- set the desired display mode
- access the Setup menu

The Display Modes

The Display Modes

"Now" display mode	.....	Displays real-time values
"Day" display mode	.....	Displays values for power fed into the grid during that day
"Year" display mode	.....	Displays values for the present calendar year - only available in combination with optional Fronius Datalogger
"Total" display mode	.....	Displays values for power fed into the grid since the inverter was started for the first time

Selecting a Display Mode

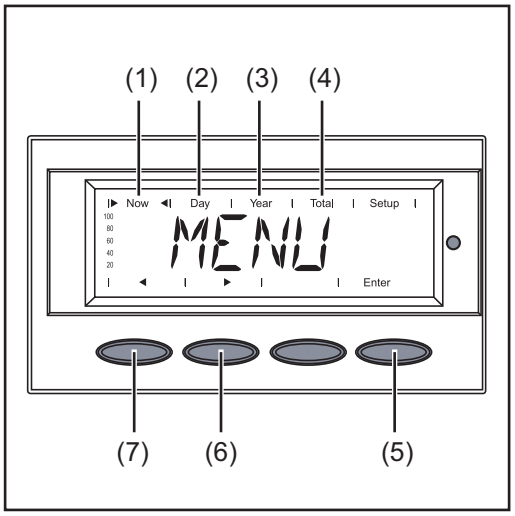

1. Accessing the menu level
2. Use the "left" (7) or "right" (6) keys to select your preferred display mode (1) - (4)
   ◀ ▶
3. Press "Enter" (5)

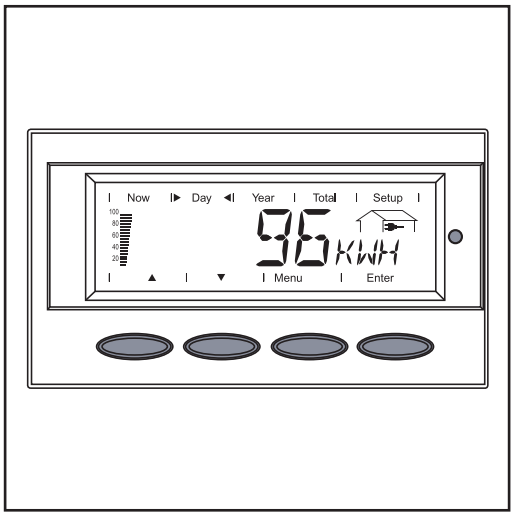

The selected display mode is shown, e.g., "Day" display mode.

IMPORTANT! The "Year" menu option is supported only when the optional Fronius Datalogger is connected. This system upgrade includes a real-time clock.

Overview of display values

Display mode	Icon	Unit	Optional	Display value
"Now"		W	-	Output power
		V	-	AC grid voltage
		A	-	Output current
		Hz	-	Grid frequency
		V	-	Solar module voltage
		A	-	Solar module current
		-	-	GFDI Status
		-	-	Communication with NL MON [xx]
		-	-	AFD Status
		HH:MM	x	Time
"Day"		kWh / MWh	-	Output energy
"Total"		Currency	-	Yield
		kg / T	-	CO_2 reduction
		W	-	Maximum output power
		V	-	Maximum grid voltage
		V	-	Minimum grid voltage
		V	-	Maximum solar module voltage
		HH:MM	-	Operating hours of the inverter

x Optional
If the required option card is not available, "N.A." (not available) is displayed.

xx Is not displayed at the Fronius IG Plus 12.0-3 A WYE 277 inverter

Display Values in "Now" Display Mode

Selecting the "Now" Display Mode

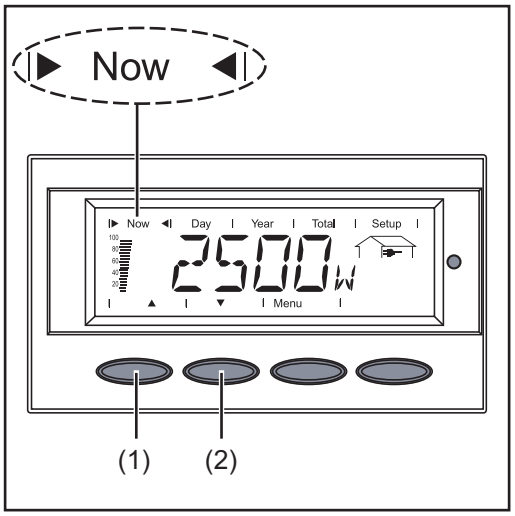

1 Select the "Now" display mode

The first display value in the "Now" display mode appears

2 Use the "Down" (2) key to scroll to the next display value

Scroll back using the "Up" key (1)

Display values in the 'Now' display mode

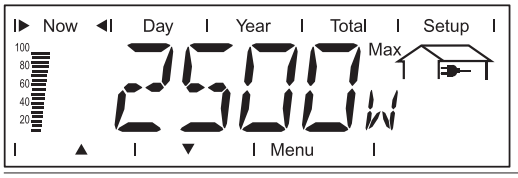

Output power
power supplied to grid at the particular moment (Watts)

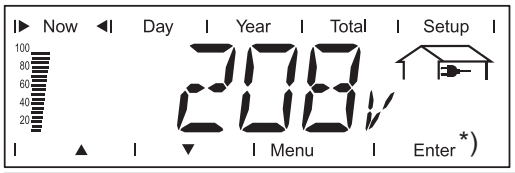

AC grid voltage
(Volts)

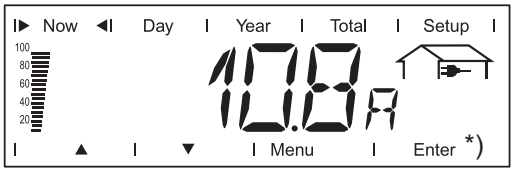

Output current
current supplied to the grid at the particular moment (Amperes)

*) only for multi-phase inverters

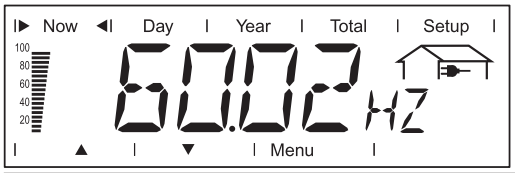

Grid frequency
(Hertz)

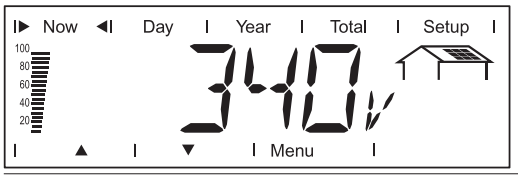

Solar module voltage
voltage of the solar array at the particular moment (Volts)

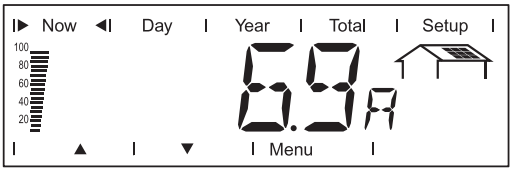

Solar module current
current supplied by solar array at the particular moment (Amperes)

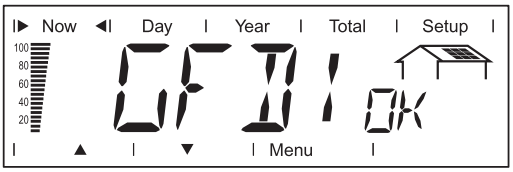

GFDI status
If there is no ground fault in the system, ‘GFDI OK’ is displayed

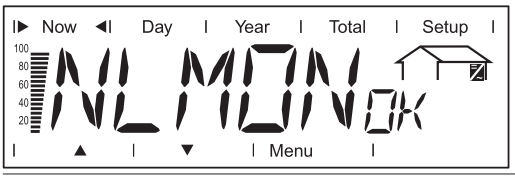

NL-MON communication
When there is communication with the ‘NL-MON’ plug-in card, ‘NLMON OK’ is displayed

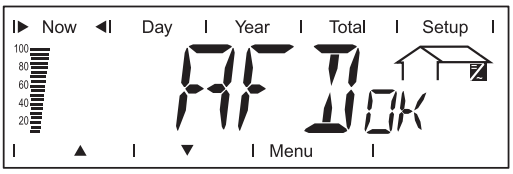

AFD-Status
When there is a Communication with the ‘Fronius Arc Blocker‘ plug-in card, ‘AFD OK’ is displayed

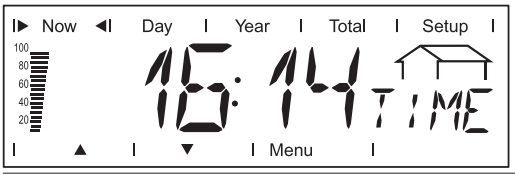

Time (optional datalogger)
When the time on the inverter or on a datalogger is changed, this changes the time on all devices connected via Solar Net.

Options

If the DatCom component for the required options is not available, the message "N.A." (not available) is shown.

Display Values in "Day / Year / Total" Display Modes

General

For the Fronius IG Plus unit, the day begins when it switches on. If the DC supply line is disconnected and no Fronius Datalogger is connected, the following parameters within the display mode ‘Day’ will be reset after repeating the start-up:

- yield (currency can be selected)
- CO_2 reduction (lbs.)
- maximum power supplied (Watts)
- maximum grid voltage (Volts)
- minimum grid voltage (Volts)
- operating hours for Fronius IG Plus unit

If an optional datalogger is available, the display values listed always apply for the whole day.

Selecting "Day / Year / Total" Display Mode

First Display Value in the "Day" Display Mode:

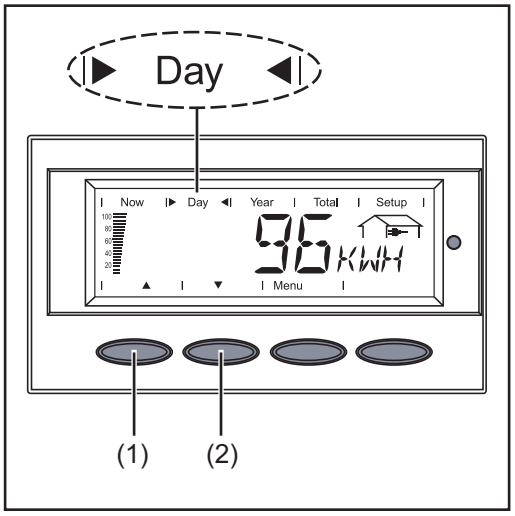

First Display Value in the "Year" Display Mode:

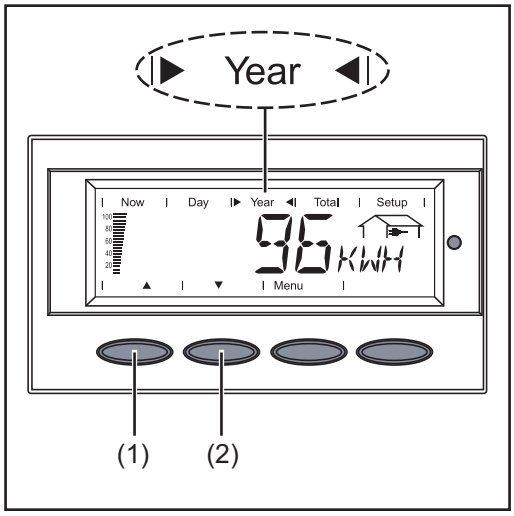

First Display Value in the "Total" Display Mode:

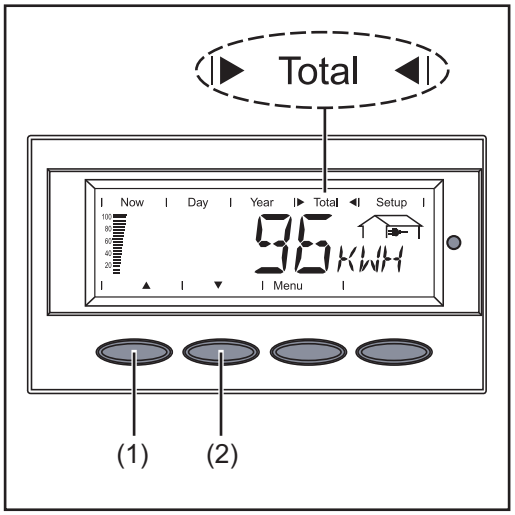

1 Select the "Day" or "Year" or "Total" display mode

The first display value in the selected display mode appears.

2 Use the "Down" (2) key to scroll to the next display value

Scroll back using the "Up" key (1)

Display values in the ‘Day / Year / Total’ display modes

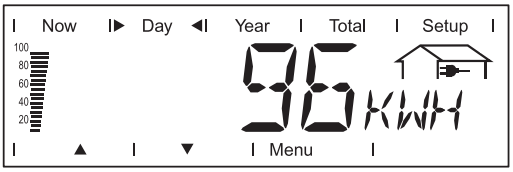

Output energy
Energy supplied during the monitored period (kWh / MWh)

Due to the variety of different monitoring systems, there can be deviations between the readings of other metering instruments as compared to the readings from the inverter. For determining the energy supplied to the grid, only the readings of the calibrated meter supplied by the electric utility company are relevant.

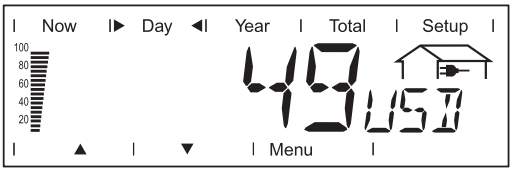

Yield
Money earned during the monitored period (set currency and price per kWh in setup menu)

As was the case for the output energy, readings may differ from those of other instruments.

‘The Setup Menu’ section describes how to set the currency and rate for the energy supplied. The factory setting depends on the respective country-specific setting.

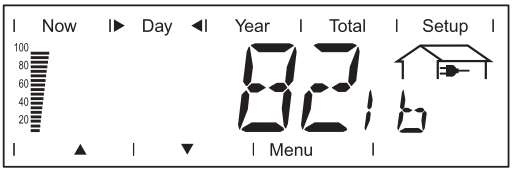

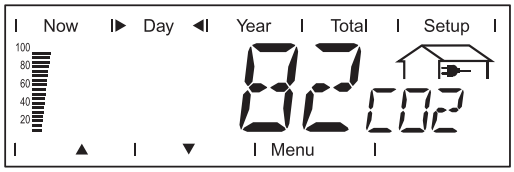

CO2 reduction
CO2 emissions saved during the monitored period
(lb or T; pounds or tons)
The area for unit display switches between ‘lb’ or ‘T’ and ‘CO2.’

The CO2 meter gives an indication of CO2 emissions that would be released during the generation of the same amount of electricity in a combustion power plant.
This factory setting for this is 1.3 lb/kWh.

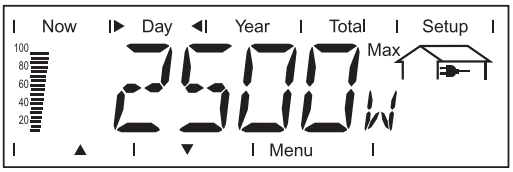

Maximum output power
Highest output power during the observation period (watts)

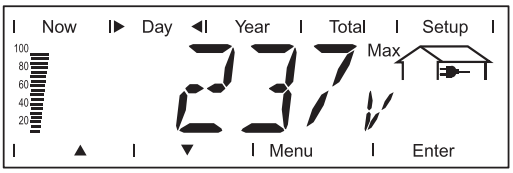

Maximum grid voltage
Highest reading of grid voltage (V) during the observation period

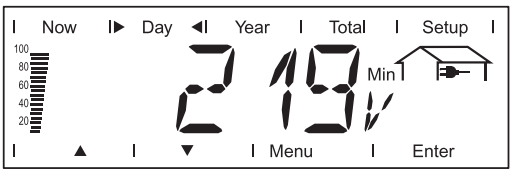

Minimum grid voltage
Lowest reading of grid voltage (V) during the observation period

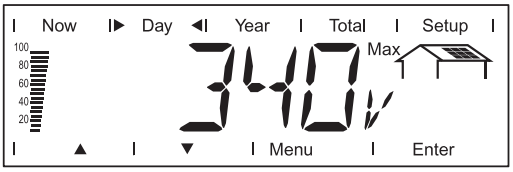

Maximum solar module voltage
Highest reading of solar module voltage (V) during the observation period

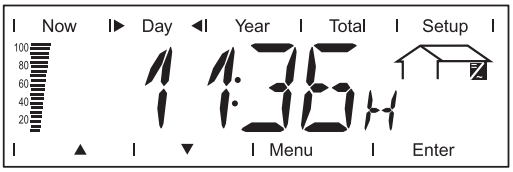

Operating hours
Indicates how long the inverter has been operating
(HH:MM)

Duration of operation is shown in hours and minutes up to 999 h and 59 min (display: ‘999:59’). After that only full hours are displayed.

Although the inverter does not operate during the night, all sensor data are recorded around the clock.

Options

If the DatCom component for the required options is not available, the message "N.A." (not available) is shown.

The Setup Menu

Presetting

The inverter is pre-configured and ready to use. No manual control is necessary for feeding the power it generates into the grid.

The setup menu allows easy readjustment of the inverter's preset parameters to your needs.

Accessing the Setup Menu

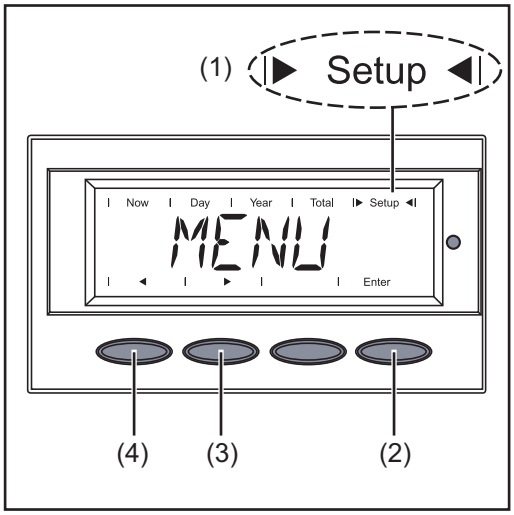

1. Switch to the menu level (press the "Menu" key)
2. Select the "Setup" (1) mode using the "Left" (4) or "Right" (3) keys
3. Press "Enter" (2)

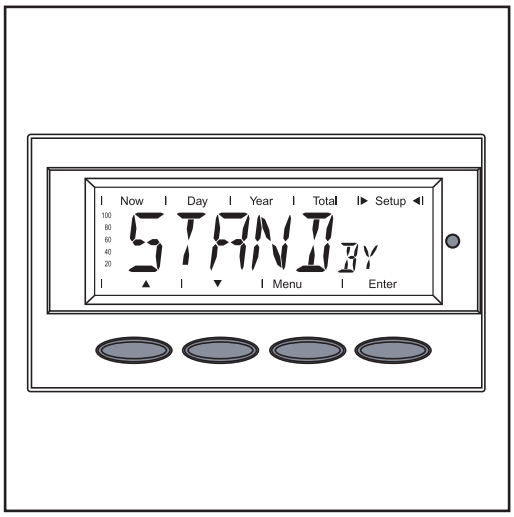

The Setup Menu’s first menu item "STAND-BY" is shown.

Scrolling through Menu Items

Example: "STANDBY" menu item

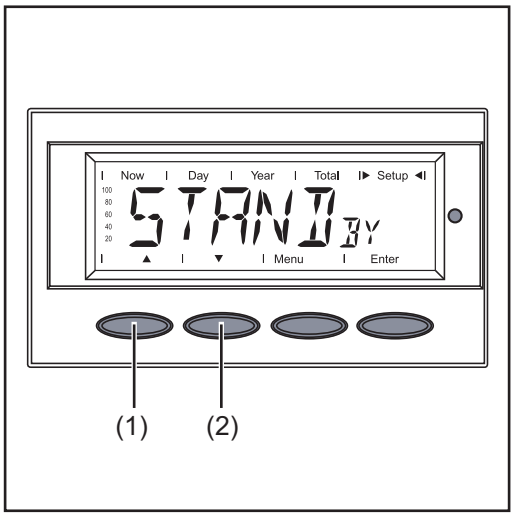

Example: "CONTRAST" menu item

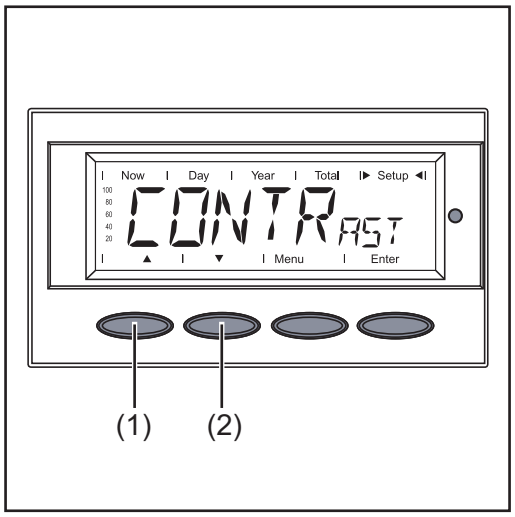

1. Access the Setup menu
2. Scroll through the available menu items using the "Up" (1) and "Down" (2) keys

Menu Items in the Setup Menu

STANDBY

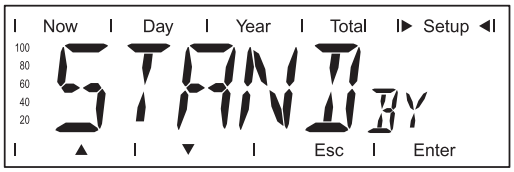

Manual activation / deactivation of Standby operation using the "Enter" key

Unit	-
Setting range	Enter
Factory setting	Automatic operation of feeding energy into the grid (Standby deactivated)

- The power electronics are switched off in standby mode. No power is fed into the grid.
- The Operating Status LED flashes orange.
- The orange flashing Operating Status LED stops at dusk.
- After the subsequent sunrise, the power supply operation into the grid is resumed automatically (after completion of the startup phase the LED is illuminated green).
- Grid supply operation can be resumed at any time whenever the LED is flashing orange (deactivate "STANDBY").

If the Standby mode is activated by pressing the "Enter" key, the display alternates between "STANDBY" and "Enter:"

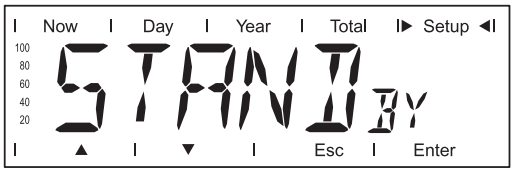

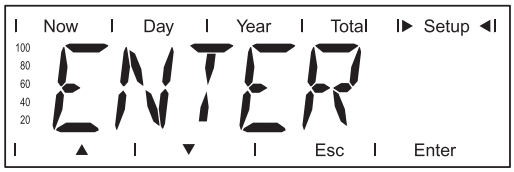

To maintain Standby operation:
- Press the "Esc" key

To end Standby operation:
- Press the "Enter" key

CONTRAST

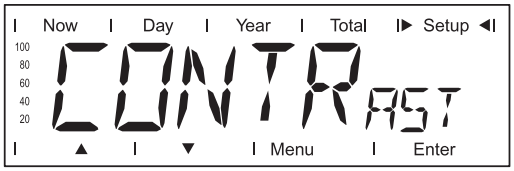

Contrast setting on LCD display

Unit	-
Setting range	0 - 7
Factory setting	7

Since contrast depends on temperature, it may be necessary to adjust the "CONTRAST" menu item when ambient conditions change.

LIGHT MODE

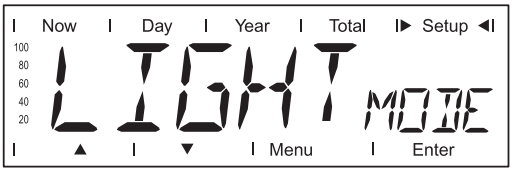

Initial setting for display illumination.

Unit	-
Setting range	AUTO / ON / OFF
Factory setting	AUTO

AUTO:	The display illumination will stop 30 seconds after the last time a key has been pressed.
ON:	The display will remain illuminated whenever power is supplied to the grid.
OFF:	The display illumination will be permanently off.

IMPORTANT! The "LIGHT MODE" setting only relates to the display's background illumination. The LCD display will still remain on during operation. Its energy consumption is less than one mW (1/1000 W).

CASH

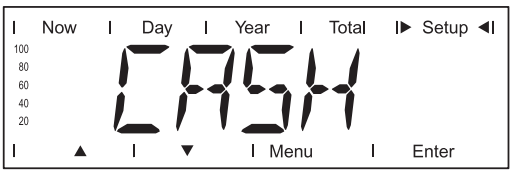

Setting of currency and rate for invoicing the energy supplied

Unit	-
Display area	Currency / Charge rate/kWh
Factory setting	USD

CO2

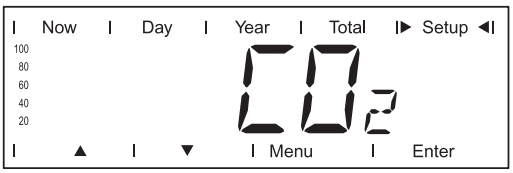

Setting of CO2 reduction factor

Unit	lb/kWh, T/kWh
Setting range	00.01 - 99.99
Factory setting	1.3

YIELD

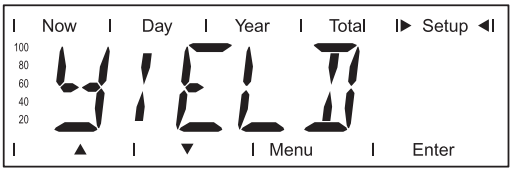

Setting
- an OFFSET value for the total energy display
- a measurement correction value for the Day, Year and Total energy display

Setting range	OFF SET / CALI.

OFF SET
Offset is an amount of energy (in Wh, kWh, or MWh) that can be added to the lifetime total energy output of the inverter to give it a 'head start.'

Unit	Wh / kWh / MWh
Setting range	5-digit + k... / M... 1 kWh = 1000 Wh 1 MWh = 1000000 Wh
Factory setting	0

CALI.
Preset correction value, so that the data shown on the inverter display corresponds to the calibrated data shown on the electric meter

Unit	%
Setting range	-5.0 - +5.0 in increments of 0.1
Factory setting	0

IG NR

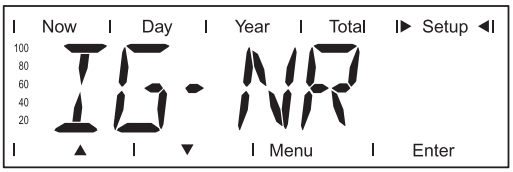

Number setting (address) of the inverter in a setup comprising multiple solar inverters linked together

Unit	-
Setting range	01 - 99 (100th inverter = 00)
Factory setting	1

IMPORTANT! Each inverter must be assigned its own address when connecting several inverters in a data communications system.

DAT COM

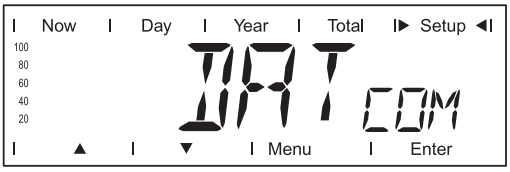

Indicates status of data transmission, resets the Personal Display Card and Interface Card

Setting range	Displays OK COM or ERROR COM; PDCD RST / IFCD RST

OK COM / ERROR COM
Displays data communication available via Solar Net or an error that occurred in data communication

PDCD RST
Resets the Fronius Personal Display Card option

IFCD RST
Resets the Fronius Interface Card option

AFD

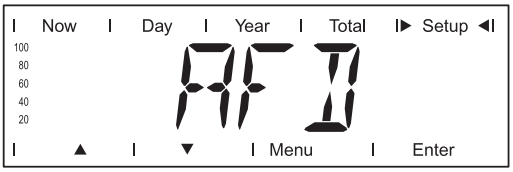

Self-test of the AFD function

Unit	-
Setting range	SELF/TEST* AFD
Factory Setting	-

SELF / TEST* AFD
Self-test to verify that the inverter stops feeding power into the grid in the event of a detected arc.

* alternating display

Test Procedure:

1. Select the menu item 'AFD' in the setup menu
2. Press the 'Enter' key
3. Select the setting option 'SELF TEST / AFD' using the 'Up' or 'Down' key
4. Press the 'Enter' key

The self-test is started. The Fronius Arc Blocker plug-in card simulates an arc and returns the corresponding signal to the inverter.

With the successful test, the inverter disconnects from the grid and stops feeding power into the grid.
The display shows 'PASS'.

5. Confirm the display 'PASS' by pressing the 'Enter' key

TIME

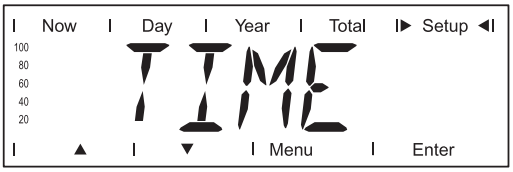

Date and time setting

Unit	DDMMYYYY, HH:MM
Setting range	Date / Time
Factory setting	-

IMPORTANT! The "TIME" menu item is only supported when the Fronius Datalogger option is installed.

STATE PS

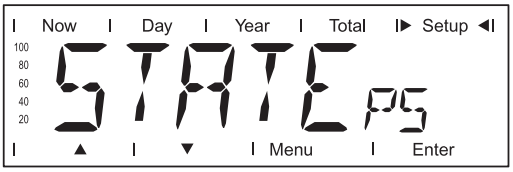

Status display of power stage sets; the last error that has occurred can be displayed

IMPORTANT! Due to the low level of irradiance early in the morning and in the evening, the status codes 306 (power low) and 307 (DC low) are displayed routinely at these times of day. These status messages do not indicate any kind of fault.

VERSION

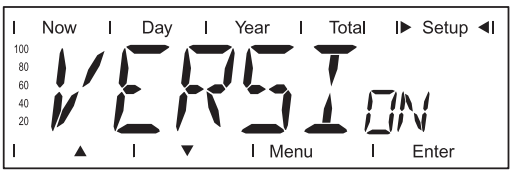

displays the version number and serial number of the electronic components (e.g., IG Brain, power stage sets, display, country setup)

Unit	-
Display area	MAIN CTRL / LCD / PS (PS00, PS01, PS02) / SETUP / AFD
Factory setting	-

MAINCTRL	Version information of the IG Brain unit (inverter controller)
LCD	Version information of the display
PS	Version information of the power stage sets (PS00 - max. PS02)
SETUP	Display of the currently set country setup You can display the current country setup (2 - 3 letters) by pressing the ‘Enter’ key, e.g., ‘US’ for USA country setup; You can exit the country setup display by pressing ‘Esc’
AFD	Arc Fault Detection Version information of the Fronius Arc Blocker plug-in card

Setting and Displaying Menu Items

Setting Menu Items - General

1. Access the Setup menu
2. Use the "Up" or "Down" keys to select the desired menu item ▲ ▼
3. Press the "Enter" key

The first digit of a value to be set flashes:

4. Use the "Up" and "Down" keys to select a value for the first digit ▲ ▼
5. Press the "Enter" key

The second digit of the value flashes.

6. Repeat steps 4 and 5 until ...

the entire value flashes.

7. Press the "Enter" key
8. Repeat steps 4 - 6 for units or other values to be set until the unit or value flashes.
9. Press the "Enter" key to save and apply the changes.

   Press the "Esc" key to not save the changes.

The currently selected menu item is displayed.

The available settings are displayed:

4. Use the "Up" and "Down" keys to select the desired setting ▲ ▼
5. Press the "Enter" key to save and apply the selection.

   Press the "Esc" key to not save the selection.

The currently selected menu item is displayed.

Examples of Setting and Displaying Menu Items

The following examples describe how to set and display menu items:

- Setting the Currency and Charge Rate
- Displaying and Setting Parameters in the "DATCOM" Menu Item
- Setting Time and Date

Setting the currency and rate

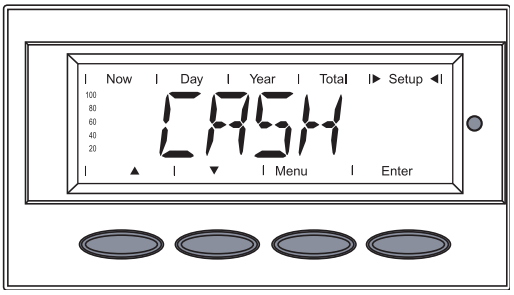

1 Select the ‘CASH’ menu item

2 Press the ‘Enter’ key

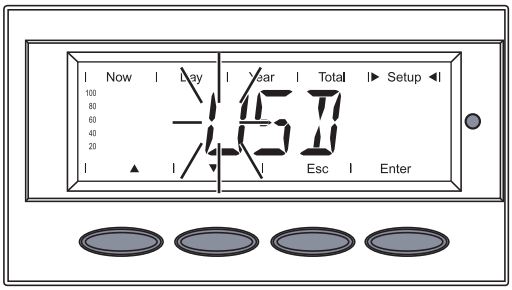

The currency is display, factory setting = ‘USD’;
The first character flashes.

3 Use the ‘Up’ and ‘Down’ keys to select a letter for the first character
▲ ▼

4 Press the ‘Enter’ key

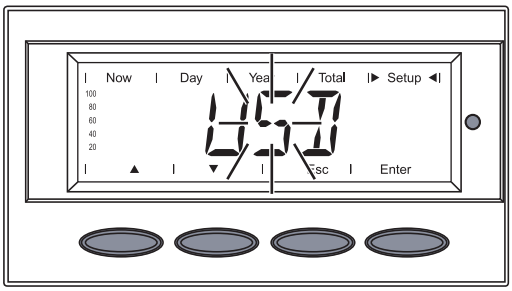

The second character flashes.

5 Use the ‘Up’ and ‘Down’ keys to select
▲ ▼
a letter for the second character

6 Press the ‘Enter’ key

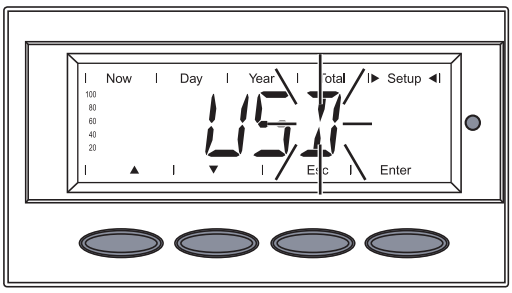

The third character flashes.

7 Use the ‘Up’ and ‘Down’ keys to select a letter for the third character
▲ ▼

8 Press the ‘Enter’ key

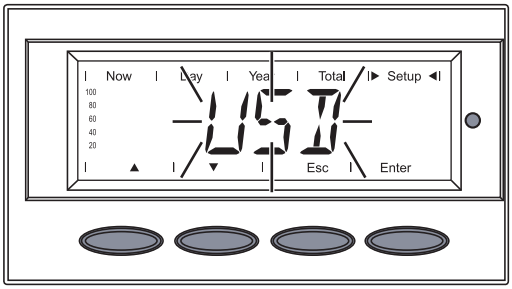

The set currency flashes.

9 Press the ‘Enter’ key

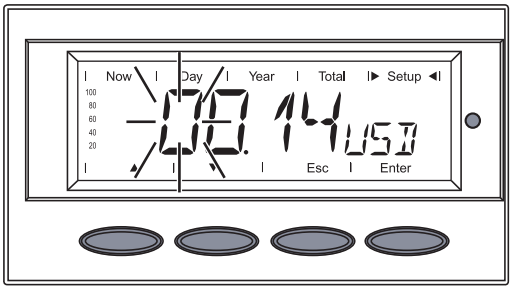

The rate for energy supplied is now displayed in kWh / currency, factory setting = 0.14 USD / kWh;
The first digit flashes.

10 Use the ‘Up’ and ‘Down’ keys to select a value for the first digit (e.g., 0)
▲ ▼

11 Press the ‘Enter’ key

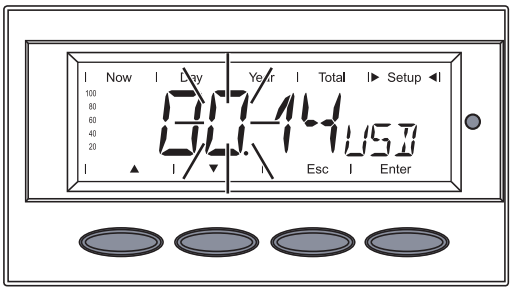

The second digit flashes.

12 Use the ‘Up’ and ‘Down’ keys to select a value for the second digit (e.g., 0)
▲ ▼

13 Press the ‘Enter’ key

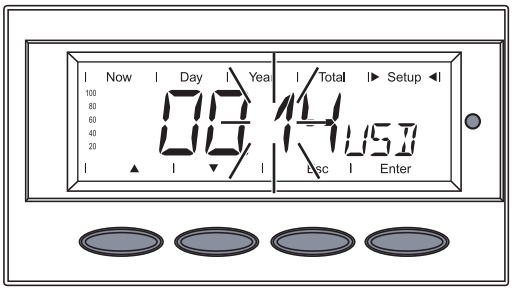

The first digit after the decimal point flashes.

14 Use the ‘Up’ and ‘Down’ keys to select a value for the first digit after the decimal point (e.g., 4)
▲ ▼

15 Press the ‘Enter’ key

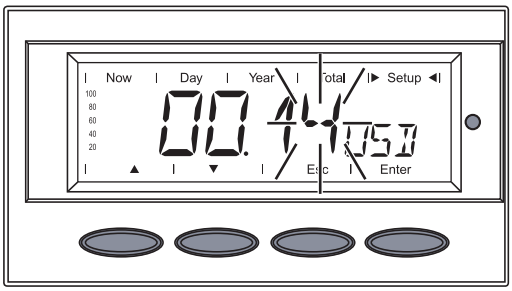

The second digit after the decimal point flashes.

16 Use the ‘Up’ and ‘Down’ keys to select a value for the second digit after the decimal point (e.g., 8)
▲ ▼

The values that can be set range from 00.01 to 99.99.

17 Press the ‘Enter’ key

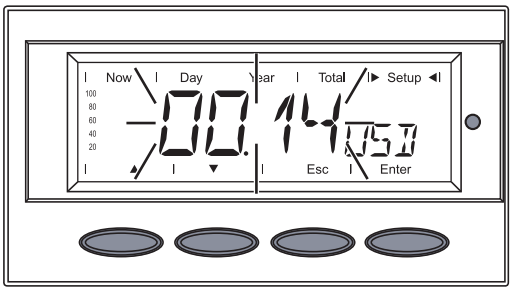

The set rate for energy supplied flashes.

18 Press the ‘Enter’ key

The currency and the rate for supplied energy are now accepted.

19 Press the ‘Esc’ key to exit the ‘CASH’ menu item

Displaying and Setting Parameters in the "DATCOM" Menu Item

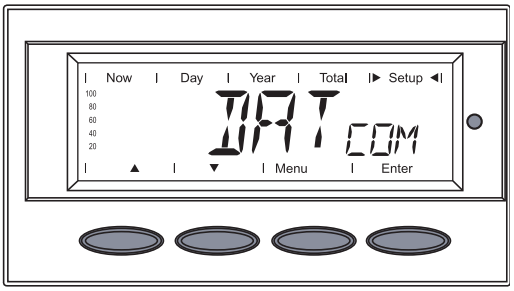

1 Select menu item ‘DATCOM’

2 Press the ‘Enter’ key

The following displays depend on whether
- a data connection is available
- a data connection is faulty or an option is not installed

Available data connection

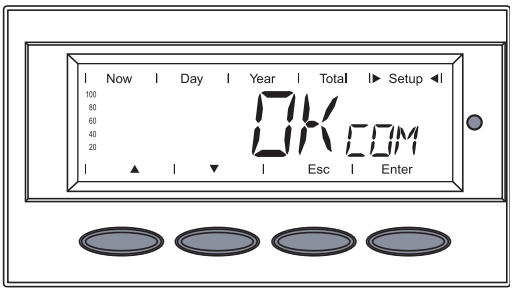

If there is a data connection available, ‘OKCOM’ is shown.

3 Use the ‘Down’ key to select available data:
▼

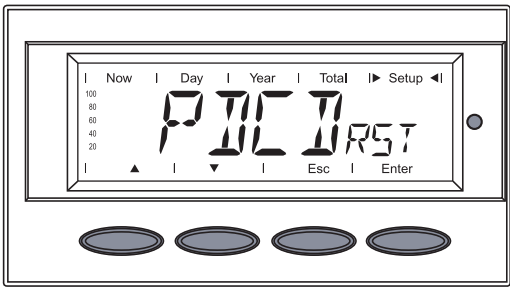

e.g. Reset Personal Display Card (‘PDCDRST’) ...

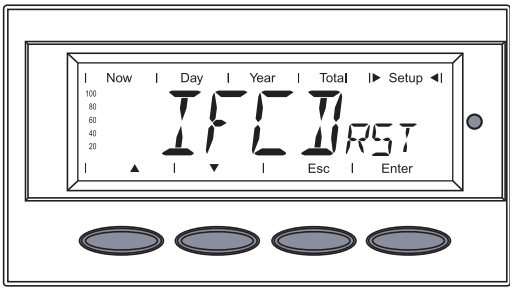

... or Reset Interface Card (‘IFCDRST’)

4 Press the ‘Enter’ key

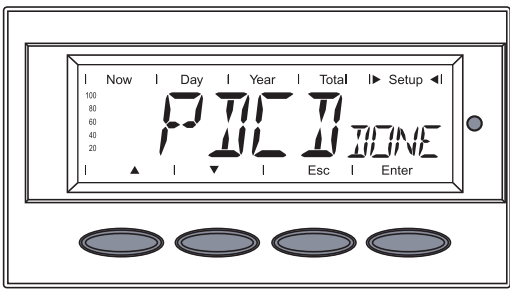

‘PDCD DONE‘...

...or...

‘IFCDDONE’ is shown

5 Press the ‘Esc’ key 2x to exit menu item ‘DATCOM’

Data connection faulty or an option is not installed

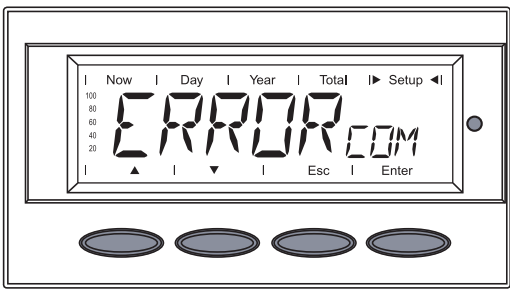

If there is a faulty data connection or options are not installed ‘ERRORCOM’ is shown.

3 Press the ‘Esc’ key to exit menu item ‘DATCOM’

Setting Time and Date

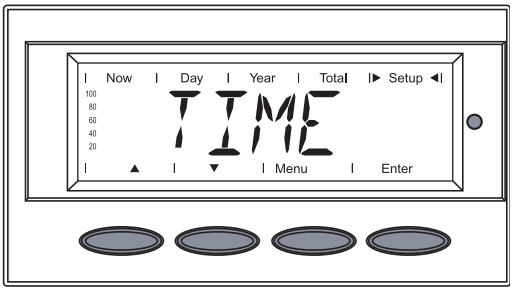

1 Select the "TIME" menu item

2 Press the "Enter" key

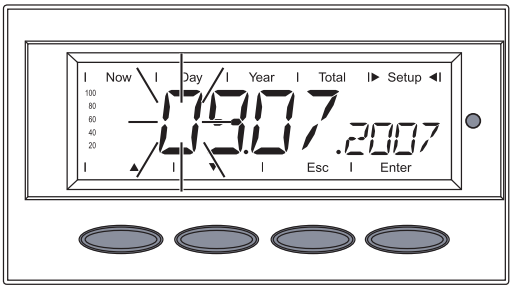

The **date** is displayed (DD.MM.YYYY), the first digit for the day flashes.

3 Use the "Up" and "Down" keys to select a value for the first day digit ▲ ▼

4 Press the "Enter" key

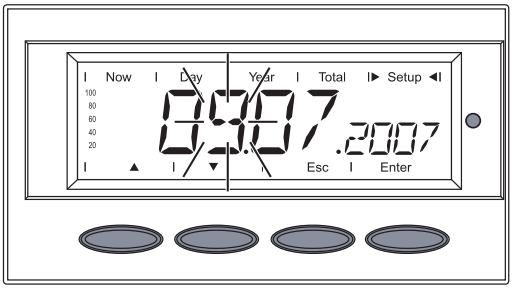

The second digit for the day flashes.

5 Use the "Up" and "Down" keys to select a value for the second day digit ▲ ▼

6 Press the "Enter" key

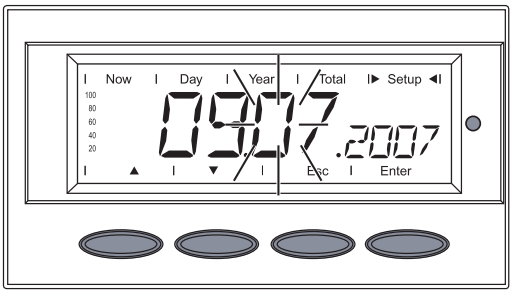

The first digit for the month flashes.

7 Use the "Up" and "Down" keys to select a value for the first month digit ▲ ▼

8 Press the "Enter" key

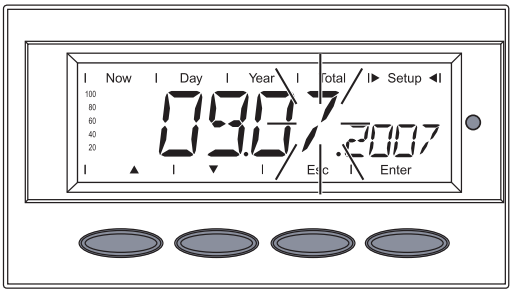

The second digit for the month flashes.

9 Use the "Up" and "Down" keys to select a value for the second month digit
▲ ▼

10 Press the "Enter" key

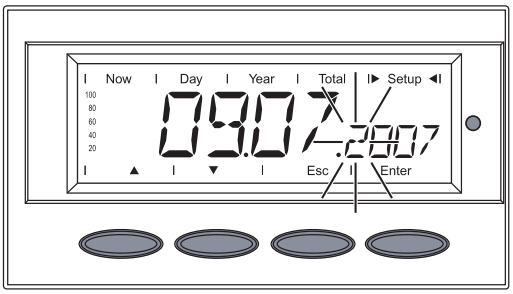

The first digit for the year flashes.

11 Use the "Up" and "Down" keys to select a value for the first year digit
▲ ▼

12 Press the "Enter" key

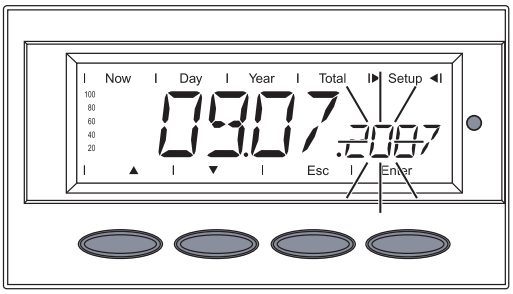

The second digit for the year flashes.

13 Use the "Up" and "Down" keys to select a value for the second year digit
▲ ▼

14 Press the "Enter" key

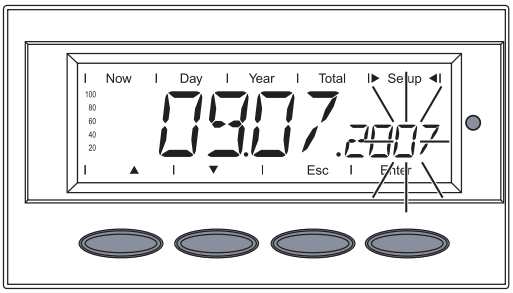

The third digit for the year flashes.

15 Use the "Up" and "Down" keys to select a value for the third year digit
▲ ▼

16 Press the "Enter" key

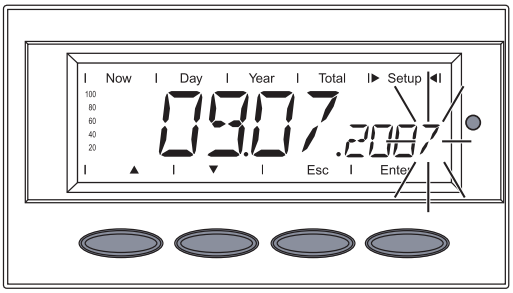

The fourth digit for the year flashes.

17 Use the "Up" and "Down" keys to select a value for the fourth year digit
▲ ▼

18 Press the "Enter" key

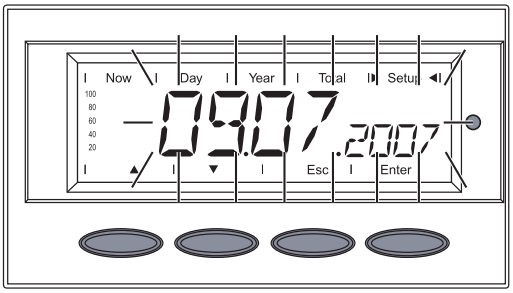

The set date then flashes.

19 Press the "Enter" key

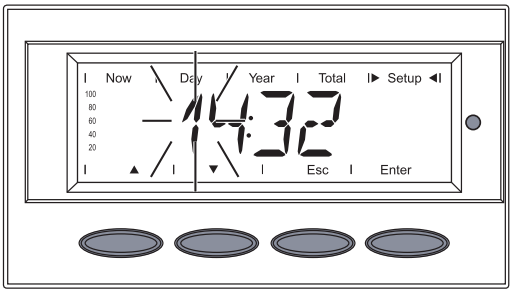

The **time** is displayed (HH:MM), the first digit for the hour flashes.

20 Use the "Up" and "Down" keys to select a value for the first hour digit ▲ ▼

21 Press the "Enter" key

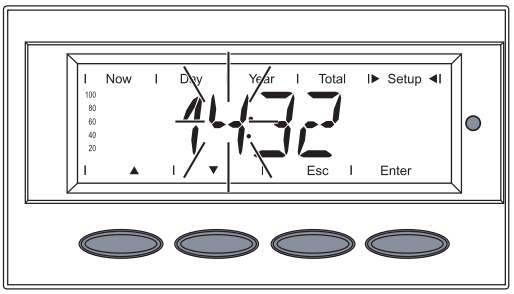

The second digit for the hour flashes.

22 Use the "Up" and "Down" keys to select a value for the second hour digit ▲ ▼

23 Press the "Enter" key

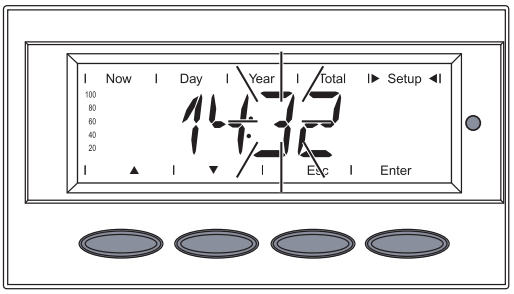

The first digit for the minutes flashes.

24 Use the "Up" and "Down" keys to select a value for the first minutes digit ▲ ▼

25 Press the "Enter" key

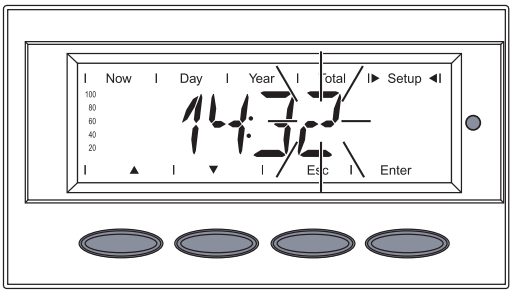

The second digit for the minutes flashes.

26 Use the "Up" and "Down" keys to select a value for the second minutes digit ▲ ▼

27 Press the "Enter" key

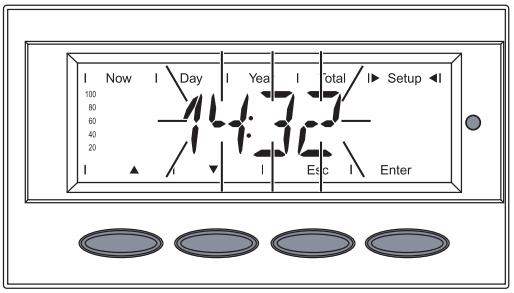

The set time flashes.

28 Press the "Enter" key to apply the time

29 Press the "Esc" key to exit the "TIME" menu item

Setup Lock function

General

The inverter comes equipped with the "Setup Lock" function.
When the "Setup Lock" function is active, the Setup menu cannot be accessed, e.g., to protect against setup data being changed by accident.
You must enter code 12321 to activate / deactivate the "Setup Lock" function.

Activating/deactivating the "Setup Lock" function

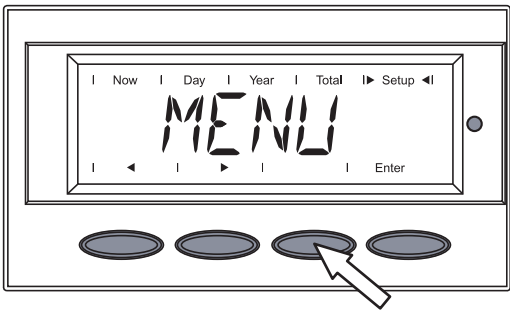

1 Press the "Menu" key

"Menu" is shown.

2 Select the "Setup" mode using the "Left" or "Right" keys
◀ ▶

3 Press the unoccupied "Esc" key 5 x

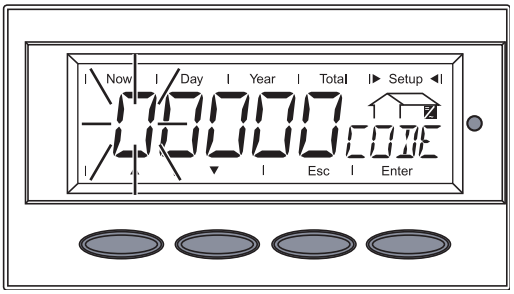

"CODE" is displayed, the first digit flashes.

4 Enter the access code 12321: Use the "Up" and "Down" keys to select a value for the first digit of the access code
▲ ▼

5 Press the "Enter" key

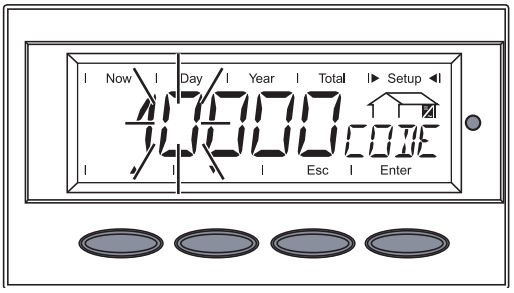

The second digit flashes.

6 Repeat steps 4 and 5 for the second, third, fourth and fifth digit of the access code until ...

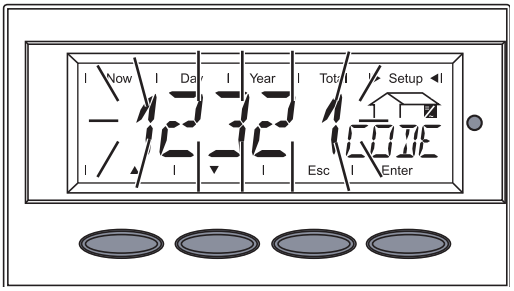

... the access code flashes.

7 Press the "Enter" key

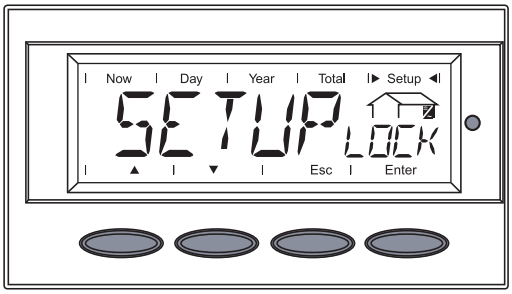

"SETUP LOCK" is displayed.

8 Press the "Enter" key

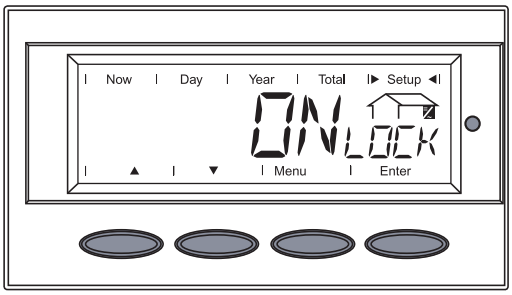

"ON LOCK" is displayed.

9 Use the "Up" and "Down" keys to select the desired function
▲ ▼

ON LOCK = "Setup Lock" function is activated (the Setup menu cannot be accessed)

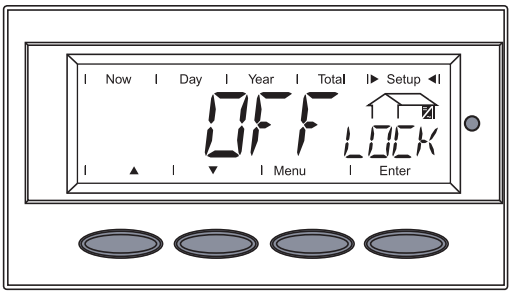

OFF LOCK = "Setup Lock" function is deactivated (the Setup menu can be accessed)

10 Press the "Enter" key to apply the function

Status Diagnosis and Troubleshooting

Displaying Status Codes

Your inverter is equipped with a self diagnostic system that automatically identifies a large number of possible operation issues by itself and displays them on the screen. This enables you to know immediately if there are any malfunctions in the inverter, the photovoltaic system or any installation or operating errors.

Whenever the self diagnostic system has identified a particular issue, the respective status code is shown on the screen.

IMPORTANT! Status codes may sometimes appear briefly as a result of the control response from the inverter. If it subsequently continues to operate normally, there has not been a system error.

Normal Operation Status Codes

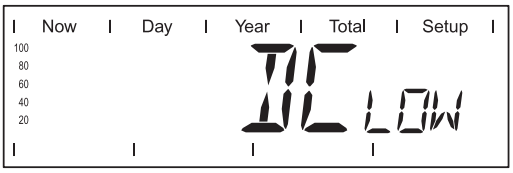

The open circuit voltage of the solar modules is too low.

As soon as the open circuit voltage exceeds 265 V, the inverter starts synchronizing with the grid (display shows "SYNC AC").

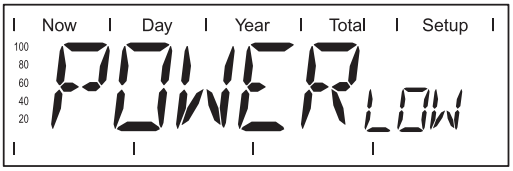

The total power output of the solar modules is insufficient.

After a short time the inverter resumes grid synchronization (display shows "SYNC AC").

Total Failure

If the display remains dark for a long time after sunrise:

- Check the open circuit voltage of the solar modules at the connections of the inverter:

  Open circuit voltage < 260 V ... error in the photovoltaic system

  Open circuit voltage > 260 V ... may indicate a basic fault in the inverter. In this case, notify a Fronius-trained service engineer.

Status Codes on inverters with Several Power Stage Sets

A special status diagnostic is run if an error occurs in an inverter with several power stage sets.

It is also possible to call up status codes even if there is no actual error in existence. This form of status polling may be found in the section "The Setup Menu."

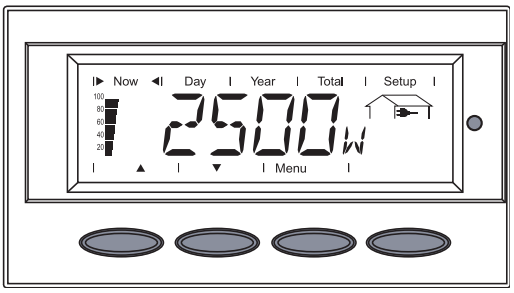

Display during normal operation

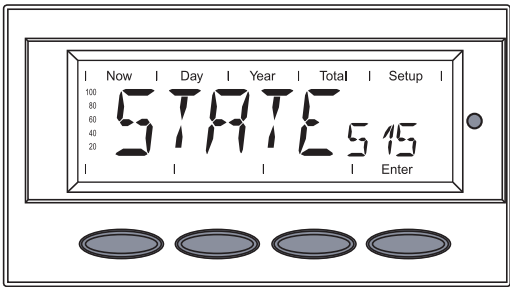

When there is an error in one of the power stage sets, the display flashes between "STATE" and the corresponding status code
(e.g., "STATE 515")

and

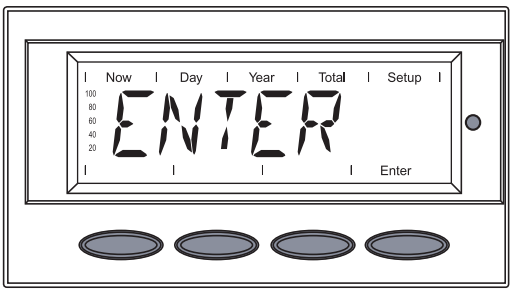

"ENTER"

- Press the "Enter" key twice

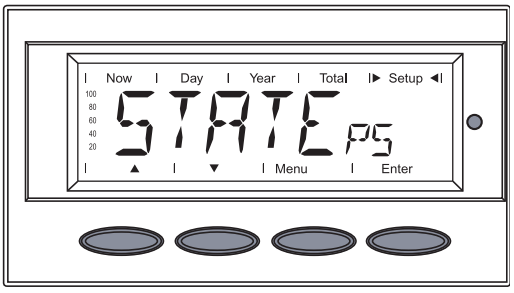

- The status display of the power stage sets "STATE PS" appears
- Press the "Enter" key

Class 1 Status Codes

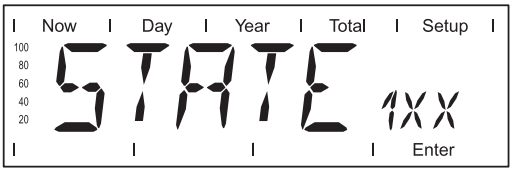

Class 1 status codes are typically temporary. Their cause lies in the public grid.

The initial response of the inverter is to disconnect itself from the grid. The grid is subsequently checked for the stipulated monitoring period. If after the end of this period no further defect is identified, your inverter resumes operating and feeding power into the grid.

IMPORTANT! The 2nd position x defines the exact network point for the following status codes:

0 = several / all 3 phases
1 = L1
2 = L2
3 = L3

1x2

AC voltage too high

Behavior	Grid conditions are thoroughly tested and as soon as they are again within the permissible range, the inverter will resume feeding power into the grid.
Remedy	Check grid connections and fuses Should the status code persist, you should contact your system installer

1x3

AC voltage too low

Behavior	Grid conditions are thoroughly tested and as soon as they are again within the permissible range, the inverter will resume feeding power into the grid.
Remedy	Check grid connections, breakers and disconnect Should the status code persist, you should contact your system installer

1x5

AC frequency too high

Behavior	Grid conditions are thoroughly tested and as soon as they are again within the permissible range, the inverter will resume feeding power into the grid.
Remedy	Check grid connections and fuses Should the status code persist, you should contact your system installer

1x6

AC frequency too low

Behavior	Grid conditions are thoroughly tested and as soon as they are again within the permissible range, the inverter will resume feeding power into the grid.
Remedy	Check grid connections and fuses Should the status code persist, you should contact your system installer

1x7

No AC grid detected

Behavior	Grid conditions are thoroughly tested and as soon as they are again within the permissible range, the inverter will resume feeding power into the grid.
Remedy	Check grid connections and fuses Should the status code persist, you should contact your system installer

108

Islanding detected

Behavior	Grid conditions are thoroughly tested and as soon as they are again within the permissible range, the inverter will resume feeding power into the grid.
Remedy	Should the status code persist, you should contact your system installer

109

General grid error
This error is always displayed first for grid errors. After reviewing all power stage sets, the grid error is specified in more detail: 1x1 / 1x4 or the display remains at "109" (e.g., when 2 phases report "104" and one phase "101")

Behavior	Grid conditions are thoroughly tested and as soon as they are again within the permissible range, the inverter will resume feeding power into the grid.
Remedy	Check grid connections and fuses Should the status code persist, you should contact your system installer

Class 2 Status Codes

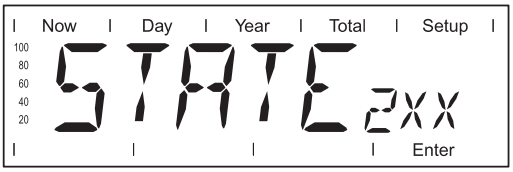

Status codes of class 2 are typically temporary. Their cause lies in the grid.

The first reaction of the inverter is to disconnect from the grid. Subsequently, the grid will be checked for the duration of the observation period stipulated. If after the end of this period no further defect is identified, the inverter resumes operating and feeding power into the grid.

IMPORTANT! The 2nd position x defines the exact network point for the following status messages:
0 = several / all 3 phases
1 = L1
2 = L2
3 = L3

2x2

Grid voltage exceeds admissible limits

Behavior	As soon as the grid voltage has returned to admissible range, the inverter resumes feeding power into the grid.
Remedy	Check grid voltage; if the status code persists you should contact your electrical contractor

2x3

Grid voltage below admissible limits

Behavior	As soon as the grid voltage has returned to admissible range, the inverter resumes feeding power into the grid.
Remedy	Check grid voltage, if the status code persists you should contact your electrical contractor

207

No grid voltage detected

Behavior	As soon as the grid conditions have returned to admissible range, the inverter resumes feeding power into the grid.
Remedy	Check grid connections and fuses; if the status code does not disappear you should contact your electrical contractor

240

The Fronius Arc Blocker plug-in card has detected an arc in the inverter.

Behavior	The inverter stops feeding power into the grid, the display shows a critical error via a red Operating Status LED
Remedy	according to section “Resetting the inverter after a detected arc“

245

Self-test of the Fronius Arc Blocker plug-in card failed

Behavior	The inverter stops feeding power into the grid, the display shows a critical error via a red Operating Status LED
Remedy	according to section “Resetting the inverter after a detected arc“

247

Wrong or no current sensor connected

Behavior	The inverter stops feeding power into the grid, the display shows a critical error via a red Operating Status LED
Remedy	Connect the current sensor properly; If status code persists: Contact a Fronius-trained service technician.

248

Error with the “Ext. Shutdown“ jumper - The jumper at the C-Box / Snowball pc board was pluged in a wrong position

Behavior	The inverter stops feeding power into the grid, the display shows a critical error via a red Operating Status LED
Remedy	Plug the “Ext. Shutdown“ jumper in Position - on -

249

EEPROM at the Fronius Arc Blocker plug-in card is defective

Behavior	The inverter stops feeding power into the grid, the display shows a critical error via a red Operating Status LED
Remedy	- Disconnect the inverter from AC grid and from DC-side - Reconnect the inverter to AC- and DC-side - Switch on the inverter If status code persists: Contact a Fronius-trained service technician.

250

The Fronius Arc Blocker plug-in card has detected no error after starting the manual self-test. Feeding power into the grid was stopped due to test procedure.

Behavior	After Resetting the self-test the inverter starts again. The state code is shown between “SYNC AC“ und “STARTUP“.
Remedy	Due to the further startup phase the state code is not shown anymore.

251

The ‘Resume‘ switch at the Fronius Arc Blocker plugin-card is in position ‘Resume‘

Behavior	The inverter stops feeding power into the grid, the display shows a critical error via a red Operating Status LED
Remedy	- Switch the ‘Resume‘ switch at the Fronius Arc Blocker plug-in card back to the initial position - Carry out an AC-reset of the inverter See also section “Resetting the inverter after a detected arc using the switch on the Fronius Arc Blocker plug-in card“

252

False current sensor connected or no current sensor connected

Behavior	The inverter stops feeding power into the grid, the display shows a critical error via a red Operating Status LED
Remedy	Check the current sensor; if the status code does not disappear you should contact your electrical contractor

253

The supply voltage or the measuring reference voltage of the Fronius Arc Blocker plug-in card is out of defined parameters

Behavior	The inverter stops feeding power into the grid, the display shows a critical error via a red Operating Status LED
Remedy	If status code persists: Contact a Fronius-trained service technician.

Class 3 status codes

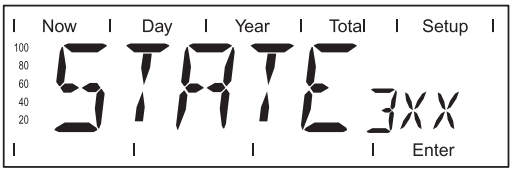

Class 3 comprises status codes that may appear during feed-in operation and that do not cause a permanent interruption of the operation of feeding power into the grid.

After automatic disconnection from the grid and waiting for its conditions to return to those stipulated, your inverter will try to resume feed-in operation.

301

Overcurrent (AC)

Description	Short interruption of power feeding into the grid due to overcurrent. The inverter returns to the startup phase.
Remedy	Fault is rectified automatically If this status code keeps recurring, contact your system installer

302

Overcurrent (DC)

Description	Short interruption of power feeding into the grid due to overcurrent. The inverter returns to the startup phase.
Remedy	Fault is rectified automatically If this status code keeps recurring, contact your system installer

303

Over-temperature buck converter

Description	Short interruption of power feeding into the grid due to overtemperature. The inverter returns to the startup phase.

Remedy	Fault is rectified automatically If this status code keeps recurring, contact your system installer

304

Over-temperature cooling element

Description	Short interruption of power feeding into the grid due to over-temperature. The inverter returns to the startup phase.
Remedy	Fault is rectified automatically If this status code keeps recurring, contact your system installer

305

No power transfer to grid possible

Description	Continual interruption of grid feed operation
Remedy	Should the status code persist, you should contact your system installer

'POWER LOW' (306)

Intermediate circuit voltage has dropped below permissible threshold value for feed in.
This error is shown on the inverter in plain text.

Description	Short interruption of power feeding into the grid. The inverter returns to the startup phase.
Remedy	Fault is rectified automatically If this status code keeps recurring, contact your system installer

'DC LOW' (307)

DC input voltage is too low for feed in.
This error is shown on the inverter in plain text.

Description	Short interruption of power feeding into the grid. The inverter returns to the startup phase.
Remedy	Fault is rectified automatically If this status code keeps recurring, contact your system installer

308

Intermediate circuit voltage too high.

Description	Short interruption of power feeding into the grid. The inverter returns to the startup phase.
Remedy	Fault is rectified automatically If this status code keeps recurring, contact your system installer

Class 4 status codes

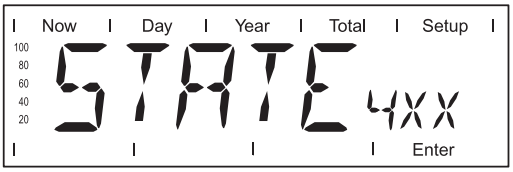

Class 4 status codes may require the intervention of a trained Fronius service technician.

401

No internal communication with power stage set

Description	The inverter will automatically attempt to connect again and, if possible, resume feeding power into the grid
Remedy	Check grid connections and fuses If status code persists: Contact a Fronius-trained service technician

402

Communication with EEPROM not possible

Description	The inverter will automatically attempt to connect again and, if possible, resume feeding power into the grid.
Remedy	If status code persists: Contact a Fronius-trained service technician

403

EEPROM faulty

Description	The inverter will automatically attempt to connect again and, if possible, resume feeding power into the grid.
Remedy	If status code persists: Contact a Fronius-trained service technician

406

One or both temperature sensors are defective

Description	The inverter disconnects from the grid for safety reasons.
Remedy	If status code persists: Contact a Fronius-trained service technician

407

Temperature sensor at cooling element defective

Description	The inverter disconnects from the grid for safety reasons.
Remedy	If status code persists: Contact a Fronius-trained service technician

408

Direct current feed in

Description	The inverter disconnects from the grid for safety reasons.

Remedy	If status code persists: Contact a Fronius-trained service technician

412

The "fixed voltage" setting has been selected instead of MPP voltage operation and the voltage is set to too low a value, or DC voltage exceeds allowable limits.

Description	Fixed voltage lower than the current MPP voltage.
Remedy	If the status code persists, you should contact a Fronius-trained service technician, or remove excess solar modules so DC voltage fits within inverter limits. If status code persists: Contact a Fronius-trained service technician

413

Control problems

Description	The inverter briefly disconnects from the grid, if AC voltage or frequency are out of range.
Remedy	If status code persists: Contact a Fronius-trained service technician

414

EEPROM faulty

Description	Memory deleted
Remedy	If status code persists: Contact a Fronius-trained service technician

416

Communication with IG Brain not possible.

Description	The Operating Status LED lights up orange, then the inverter attempts a restart.
Remedy	If status code persists: Contact a Fronius-trained service technician

417

Two power stage sets have the same PCB number

Description	The inverter stops feeding power into the grid, the display shows a critical error via a red Operating Status LED
Remedy	If status code persists: Contact a Fronius-trained service technician

419

Two or more power stage sets with an identical software serial number detected.

Description	The inverter stops feeding power into the grid, the display shows a critical error via a red Operating Status LED
Remedy	If status code persists: Contact a Fronius-trained service technician

421

PCB number has been set incorrectly

Description	The inverter stops feeding power into the grid, the display shows a critical error via a red Operating Status LED.
Remedy	If status code persists: Contact a Fronius-trained service technician

425

Communication with the power stage set is not possible

Description	The Operating Status LED lights up orange, then the inverter attempts a restart.
Remedy	If status code persists: Contact a Fronius-trained service technician

431

All power stage sets are in boot mode

Description	The inverter stops feeding power into the grid, the display shows a critical error via a red Operating Status LED.
Remedy	Update firmware using Bootloader or Fronius Solar.update/IG Plus

Switches between SLAVE / DC LOW or SLAVE / POWER LOW (439)

The MPP master power stage set is switched off because of an error in a slave power stage set (in the balance mode).

Description	The inverter stops feeding power into the grid, the display shows a critical error via a red Operating Status LED.
Remedy	If status code persists: Contact a Fronius-trained service technician

Switches between SLAVE / DC LOW or SLAVE / POWER LOW (439)

The MPP master power stage set is switched off because of a faulty GFDI fuse.

Description	The inverter stops feeding power into the grid, the display shows a critical error via a red Operating Status LED.
Remedy	Check the GFDI fuse and replace it, if necessary. If status code persists: Contact a Fronius-trained service technician

442

No phase master for a phase

Description	The inverter stops feeding power into the grid, the display shows a critical error via a red Operating Status LED.
Remedy	If status code persists: Contact a Fronius-trained service technician

443

Energy transfer not possible

Description	The inverter stops feeding power into the grid, the display shows a critical error via a red Operating Status LED.
Remedy	If status code persists: Contact a Fronius-trained service technician

445

Invalid power stage set configuration

Description	The inverter stops feeding power into the grid, the display shows a critical error via a red Operating Status LED.
Remedy	If status code persists: Contact a Fronius-trained service technician

446

Internal communication error with the NL-MON plug-in card

Description	The inverter will automatically attempt to connect again and, if possible, resume feeding power into the grid
Remedy	Check grid connections and fuses; If status code persists: Contact a Fronius-trained service technician

447

The NL-MON plug-in card has interrupted grid monitoring

Description	The inverter will automatically attempt to connect again and, if possible, resume feeding power into the grid
Remedy	If status code persists: Contact a Fronius-trained service technician

448

The neutral conductor N is not connected

Description	The inverter disconnects from the grid for safety reasons.
Remedy	If status code persists: Contact a Fronius-trained service technician

450

The monitoring of the power stage set main processor ‘Guard’ is active

Description	The inverter stops feeding power into the grid, the display shows a critical error via a red Operating Status LED.
Remedy	If status code persists: Contact a Fronius-trained service technician

451

The EEPROM Guard Control is defective

Description	The inverter stops feeding power into the grid, the display shows a critical error via a red Operating Status LED.
Remedy	If status code persists: Contact a Fronius-trained service technician

452

Communication between ‘Guard’ and the digital signal processor (DSP) has been interrupted

Description	The inverter stops feeding power into the grid, the display shows a critical error via a red Operating Status LED.
Remedy	If status code persists: Contact a Fronius-trained service technician

453

Error in grid voltage recording

Description	The inverter stops feeding power into the grid, the display shows a critical error via a red Operating Status LED.
Remedy	If status code persists: Contact a Fronius-trained service technician

454

Error in grid frequency recording

Description	The inverter stops feeding power into the grid, the display shows a critical error via a red Operating Status LED.
Remedy	If status code persists: Contact a Fronius-trained service technician

455

Reference power source for AC measurement is operating outside of tolerances

Description	The inverter stops feeding power into the grid, the display shows a critical error via a red Operating Status LED.
Remedy	If status code persists: Contact a Fronius-trained service technician

456

Error during anti-islanding test

Description	The inverter stops feeding power into the grid, the display shows a critical error via a red Operating Status LED.
Remedy	If status code persists: Contact a Fronius-trained service technician

457

Grid relay stuck

Description	The inverter stops feeding power into the grid, the display shows a critical error via a red Operating Status LED.

Remedy	If status code persists: Contact a Fronius-trained service technician

460

Reference power source for the digital signal processor (DSP) is operating outside of tolerances

Description	The inverter stops feeding power into the grid, the display shows a critical error via a red Operating Status LED.
Remedy	If status code persists: Contact a Fronius-trained service technician

461

Error in DSP data memory

Description	The inverter stops feeding power into the grid, the display shows a critical error via a red Operating Status LED.
Remedy	If status code persists: Contact a Fronius-trained service technician

464

Display error
The software and/or hardware versions of the display and IG Brain are not compatible.

Description	The inverter stops feeding power into the grid, the display shows a critical error via a red Operating Status LED.
Remedy	Update firmware using Bootloader or Fronius Solar.update/IG Plus

465

Display error
The UI command sent from the IG Brain is not recognized by the present display version.

Description	The inverter stops feeding power into the grid, the display shows a critical error via a red Operating Status LED.
Remedy	If status code persists: Contact a Fronius-trained service technician

466

Display error
The display was not detected.

Description	The inverter stops feeding power into the grid, the display shows a critical error via a red Operating Status LED.
Remedy	Check the display for damage, connect display, check ribbon wire for damage, check IG Brain for damage If status code persists: Contact a Fronius-trained service technician

467

The display has not received a start command from the IG Brain for longer than 6 s.

Description	The inverter will automatically attempt to connect again and, if possible, resume feeding power into the grid.
Remedy	If status code persists: Contact a Fronius-trained service technician

469

Throttle connected to wrong poles

Description	The inverter stops feeding power into the grid, the display shows a critical error via a red Operating Status LED.
Remedy	Properly connect throttle If status code persists: Contact a Fronius-trained service technician

470

The buck converter relay does not open at high DC voltage

Description	The inverter stops feeding power into the grid, the display shows a critical error via a red Operating Status LED.
Remedy	Check system configuration If status code persists: Contact a Fronius-trained service technician

472

Ground fault detected
(ground fault = one of the current-carrying DC conductors or solar module interconnect cables touches the ground wire or a grounded component)

Description	Inverter is blocked from feeding energy into the grid.
Remedy	Check GFDI fuse for continuity. Replace if necessary.

476

No communication with the Fronius Arc Blocker plug-in card (the Fronius Arc Blocker plug-in card is activated within the country setup)

Description	Inverter is blocked from feeding energy into the grid..
Remedy	Contact a Fronius-trained service technician

477

The “Resume“ switch is in the resume mode - no monitiring via Fronius Arc Blocker plug-in card
or
The Fronius Arc Blocker plug-in card has detected an arc in the inverter.

Description	The inverter stops feeding power into the grid, the display shows a critical error via a red Operating Status LED.

Remedy	- Disconnect AC- and DC-side before the inverter - Open the inverter - Switch back the “Resume“ switch to position - O - at the Fronius Arc Blocker plug-in card - Reconnect AC- and DC-side - Close the inverter - Switch on the inverter also see section “Resetting the inverter after a detected arc“

Class 5 status codes

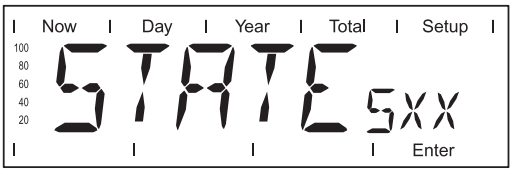

Class 5 status codes generally do not impair the operation of feeding power into the grid. They will be displayed until the service code is acknowledged by pressing a key (the inverter, however, continues working normally in the background).
- press any key
- error message disappears

501

One of the two fans is defective

Description	Low power generation because the temperature in the unit is too high.
Remedy	If status code persists: Contact a Fronius-trained service technician

504

No Solar Net communication possible

Description	Inverter address issued twice.
Remedy	Change inverter address (section: ‘The setup menu’)
Description	The Solar Net components required are in the inverter: However, communication is still not currently possible.
Remedy	Status code will disappear after changing the inverter address

505

EEPROM faulty

Description	Data from the Setup menu are lost.
Remedy	Remedied automatically

506

EEPROM faulty

Description	Data from the ‘Total’ menu are lost.
Remedy	Remedied automatically

507

EEPROM faulty

Description	Data from the ‘Day’ / ‘Year’ menu are lost.
Remedy	Remedied automatically

508

Inverter address incorrect

Description	Address for data communication is no longer saved.
Remedy	Set address again

509

24h no feed in

Description	Example: solar modules covered with snow
Remedy	Example: remove snow from solar modules

510

EEPROM faulty

Description	SMS settings were restored to default.
Remedy	If necessary, reconfigure SMS

511

EEPROM faulty

Description	Sensor card settings were restored to default
Remedy	If necessary, reconfigure metering channels

512

Too many power stage sets in the system

Description	Too many power stage sets have been detected in the system.
Remedy	If status code persists: Contact a Fronius-trained service technician

513

Power stage set in boot mode

Description	One or more power stage sets cannot be activated, because they are in boot mode.
Remedy	Update power stage set firmware

514

No communication with one of the power stage sets

Description	Warning message from one of the power stage sets, second power stage set working normally

Remedy	If status code persists: Contact a Fronius-trained service technician

515

Faulty plug connections

Description	Temperature sensor on cooling element faulty or not connected properly.
Remedy	If status code persists: Contact a Fronius-trained service technician

516

Status codes present for one of the power stage sets.

Description	It is not possible to activate all power stage sets
Remedy	Carry out analysis. For more information, see the ‘The setup menu’ section. If status code persists: Contact a Fronius-trained service technician

517

Change of master has taken place.

Description	Transformer not connected / not plugged in Bridge short-circuit Detection of intermediate circuit voltage damaged
Remedy	Check possible errors referred to in ‘Description.’ If status code persists: Contact a Fronius-trained service technician

550

String fuse defective.

Description	One or more string fuses are defective.
Remedy	Measure string fuses and replace any that are defective

550

Jumper set incorrectly

Description	The jumper on the C-Box PC board was not reset to the ‘SMon’ position after the solar module strings were checked
Remedy	Set the jumper on the C-Box PC board to the ‘SMon’ position

553

Phase master deactivated due to frequently occurring errors

Description	A reintegration of the power stage set into the Mix network will be attempted at a later time.
Remedy	If status code persists: Contact a Fronius-trained service technician

554

NL-Mon EEPROM error

Description	Default set switch off limits were restored automatically.
Remedy	System-specific changes in the ‘Advanced’ service menu have to be redone; If status code persists: Contact a Fronius-trained service technician

558

Feature deactivated (e.g., inverter control via the Fronius Power Control Box option)

Description	A feature had to be deactivated (e.g., after component replacement). The status message is no longer displayed after the next DC disconnect.
Remedy	Confirm error, update firmware using Bootloader or Fronius Solar.update/IG Plus, if required (The inverter will also operate problem-free without updating the firmware)

566

Arc Blocker disabled

Description	The Arc Blocker function was disabled in the service menu. The PV system is not protected by the Arc Blocker function.
Remedy	Confirm error

The state code will be displayed with every start-up, untill the Arc Blocker function is re-enabled in the servce menu.

Customer Service

IMPORTANT! Please contact your Fronius dealer or a Fronius-trained service technician if
- an error appears frequently or for a long period of time
- an error appears that is not listed in the tables

Maintenance

Safety

WARNING! An electric shock can be fatal. Danger from grid voltage and DC voltage from solar modules.

- The connection area should only be opened by a licensed electrician.
- The separate power stage set area should only be disconnected from the connection area after first being disconnected from the grid power.
- The separate power stage set area should only be opened by Fronius-trained service personnel.

Never work with live wires! Prior to all connection work, make sure that the AC and DC wires are not charged.

The DC main switch is only used to switch off power to the power stage set. When the DC main switch is turned off, the connection area is still energized.

These servicing instructions are for use by qualified personnel only. To reduce the risk of electric shock, do not perform any servicing other than that specified in the operating instructions.

WARNING! An electric shock can be fatal. Danger from residual voltage from capacitors.

You must wait until the capacitors have discharged. Discharge takes 5 minutes.

General

The inverter is designed so that it does not require additional maintenance. However, there are a few points to keep in mind during operation to ensure that the inverter functions optimally.

Operation in Dusty Environments

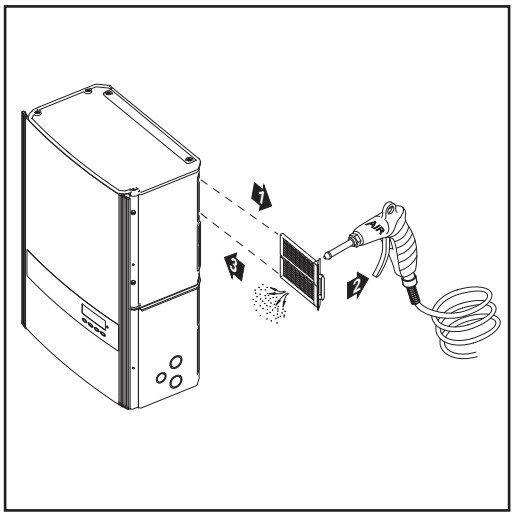

When operating the inverter in extremely dusty environments:
Remove the fan cover and clean the integrated fly screen as required

Opening the inverter for service/ maintenance

NOTE! For troubleshooting, it is useful to measure operating DC and AC voltages and retrieve any stored error codes from each power stage prior to turning off the inverter.

If the inverter is showing an error code:
- press 'enter' to enter the 'setup' menu

If the inverter is running:
- press 'menu'
- then use left-right arrows to go over to 'setup'
- Enter 'setup'
- then go down to 'state PS'
- Enter 'state PS' & note the status of power stage 00 (e. g. run, standby, or not installed)
- Then enter PS 00 & note the last error code

If no error code is stored, three blank lines will be shown.

A single stage inverter (IG Plus 3.0 or 3.8) may now be turned of as below.

For two & three stage inverters:
- press 'esc'
- use up or down arrow to select power stage set PS 01 and 02 and repeat the process.

These error codes may be useful in troubleshooting and will be erased when the inverter is turned off

Procedure for opening the inverter for service or maintenance:

1. Disconnect AC and DC supply from the inverter
2. Open the connection area
3. Turn off DC main switch
4. Allow the capacitors to discharge (5 minutes)
5. Remove metal covers
6. Remove the plastic dividers
7. Remove string fuses
8. Disconnect DC wires
9. Disconnect AC wires

Replacing String Fuses

Safety

WARNING! An electric shock can be fatal. Danger from grid voltage and DC voltage from solar modules.

- The connection area should only be opened by a licensed electrician.
- Never work with live wires! Prior to all connection work, make sure that the AC and DC wires are not charged.
- The DC main switch is used only to switch off power to the power stage set. When the DC main switch is turned off, the connection area is still energized.

These servicing instructions are for use by qualified personnel only. To reduce the risk of electric shock, do not perform any servicing other than that specified in the operating instructions.

WARNING! An electric shock can be fatal. Danger from residual voltage from capacitors.

You must wait until the capacitors have discharged. Discharge takes 5 minutes.

Preparation

NOTE! Disconnect AC and DC supply from the inverter.

1

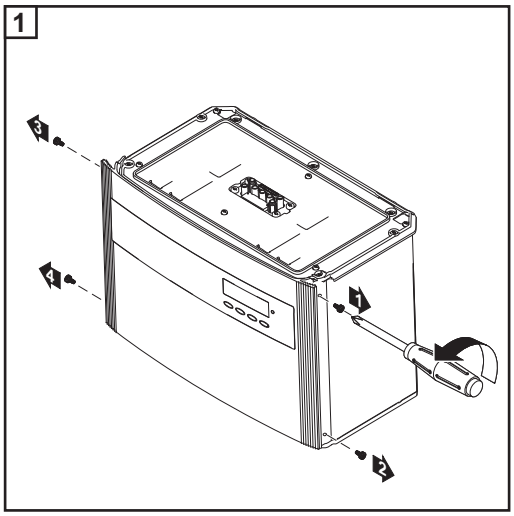

2

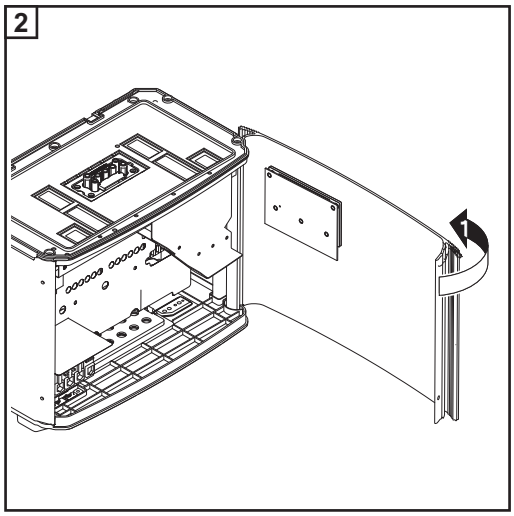

3

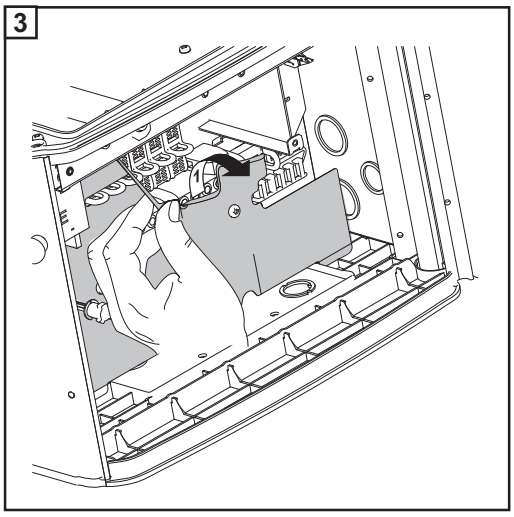

Lift up plastic dividers in the area of the string fuses

Replacing string fuses

WARNING! An electric shock can be fatal. Danger from DC voltage from solar modules.
- Never remove a fuse while it is under load.
- Fuse covers are for installation purposes only. They offer no protection against contact.

1 Test the fuse holder at the terminal for continuity

NOTE! Only use fuses for solar modules that meet the criteria for the proper selection of string fuses.

Fuse data: Diameter 0.406 x 1.378 - 1.496 in. (10.3 x 35 - 38 mm), 600 V DC

2

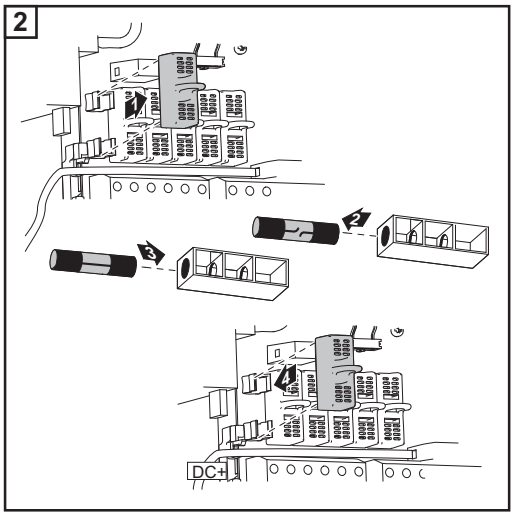

3 After replacing the fuse:
- Find out and correct the cause for the defective fuse

Closing the inverter

1

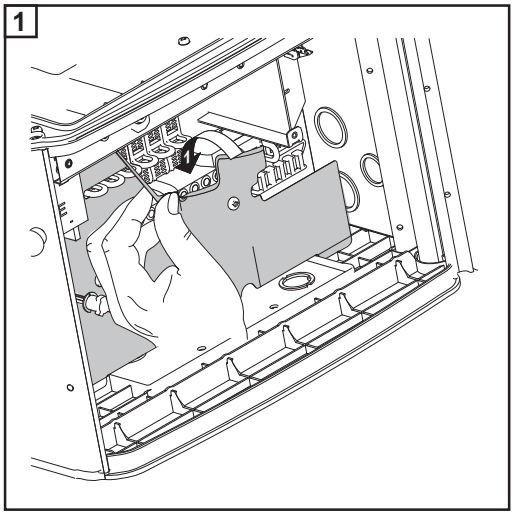

Return plastic dividers to their proper position

IMPORTANT Make sure that the plastic dividers are underneath any data communication wires that are present.

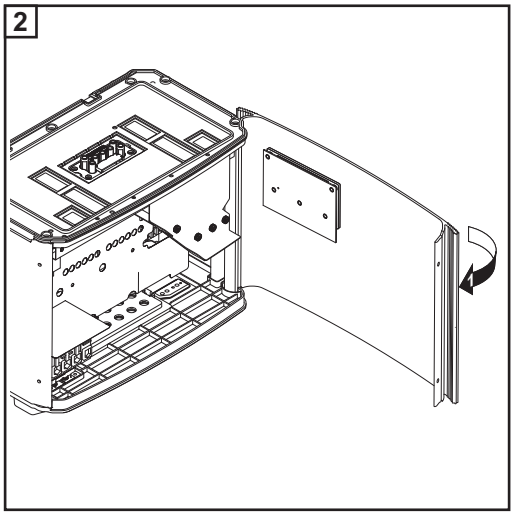
2

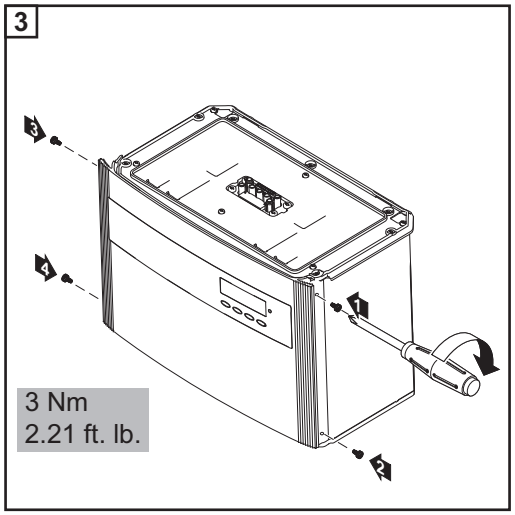
3
3
4
1
2
3 Nm
2.21 ft. lb.

Replacing GFDI fuse

Safety

WARNING! An electric shock can be fatal. Danger from grid voltage and DC voltage from solar modules.

- The connection area should only be opened by a licensed electrician.
- Never work with live wires! Prior to all connection work, make sure that the AC and DC wires are not charged.
- The DC main switch is used only to switch off power to the power stage set. When the DC main switch is turned off, the connection area is still energized.

These servicing instructions are for use by qualified personnel only. To reduce the risk of electric shock, do not perform any servicing other than that specified in the operating instructions.

WARNING! An electric shock can be fatal. Danger from residual voltage from capacitors.

You must wait until the capacitors have discharged. Discharge takes 5 minutes.

WARNING! An electric shock can be fatal. Normally grounded conductors may be ungrounded and energized when a ground fault is indicated. The ground fault has to be repaired before operation is resumed.

Preparation

NOTE! Disconnect AC and DC supply from the inverter.

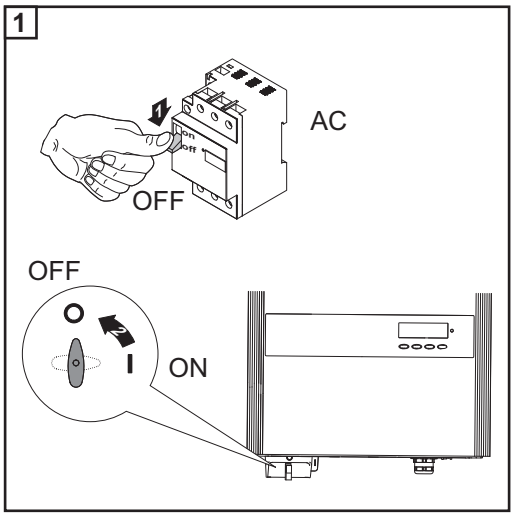

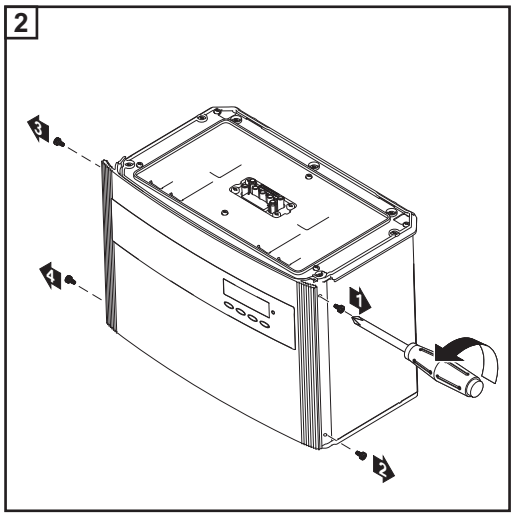

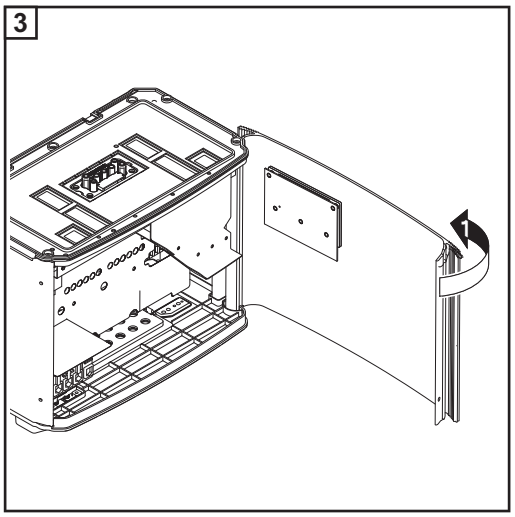

If present, disconnect data communication wire from the option cards.

Replacing GFDI fuse

WARNING! An electric shock can be fatal. Danger from DC voltage from solar modules.
- Never remove a fuse while it is under load.
- Fuse covers are for installation purposes only. They offer no protection against contact.

1 Test the fuse holder at the terminal for continuity

NOTE! Only use fuses that comply with the following data for the GFDI fuse:

Diameter 0.406 x 1.378 - 1.496 in. (10.3 x 35 - 38 mm), 1 A, 600 V DC

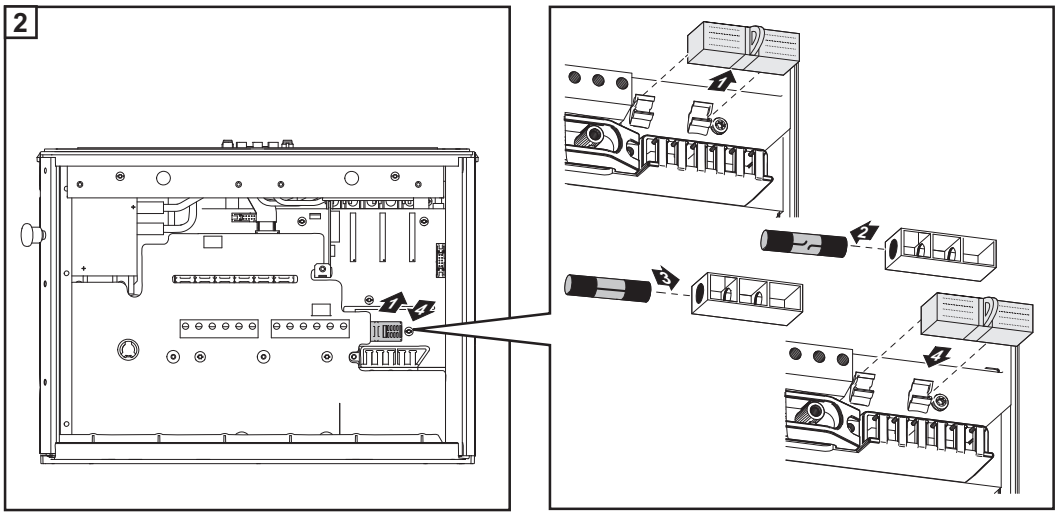

3 After replacing the fuse:
- Find out and correct the cause for the defective fuse

Closing the inverter

1 Connect available data communication wire to the option cards.

IMPORTANT! Make sure that the plastic dividers are underneath any data communication wires that are present.

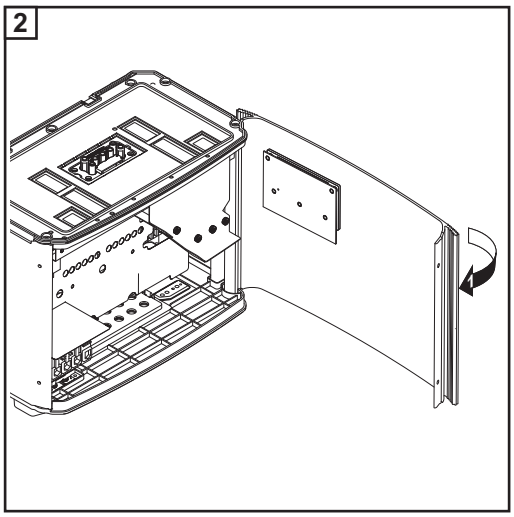

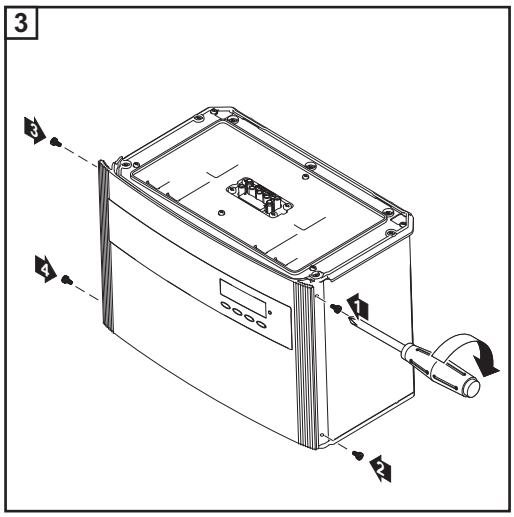

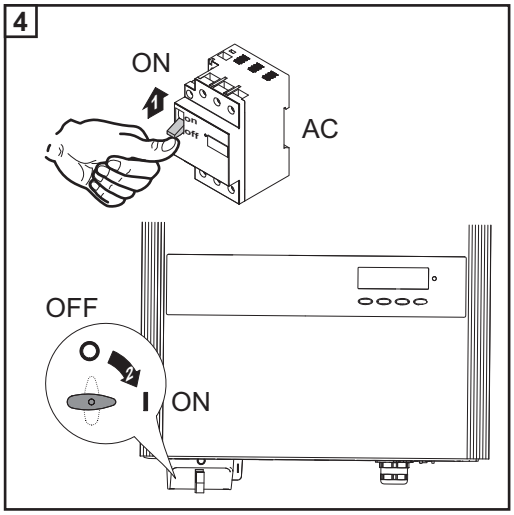

Resetting the inverter after a detected arc using the display

General

NOTE! Fronius will not accept any costs for loss of production, installation costs, etc., which may arise due to a detected arc and its consequences.
Fronius is not liable for fire that may occur in spite of the integrated arc detection / interruption (e.g. due to a parallel arc).

IMPORTANT! Before the inverter is reset after a detected arc, check all the affected photovoltaic system for damage.

Initial situation

- The Fonius Arc Blocker plug-in card has detected an arc in the inverter.
- The inverter has stopped feeding power into the grid.
- The operating status LED lits up red.
- The state code 240 is shown at the display.

Resetting the inverter after a detected arc using the display

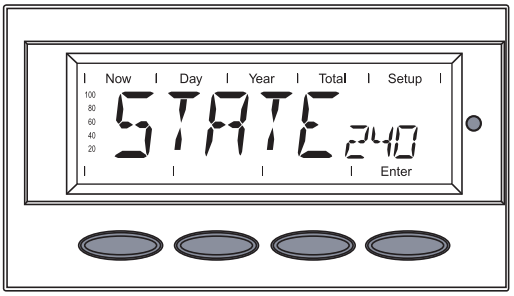

After a detected arc the state code 240 is displayed.

1 Press the ‘Enter‘ key

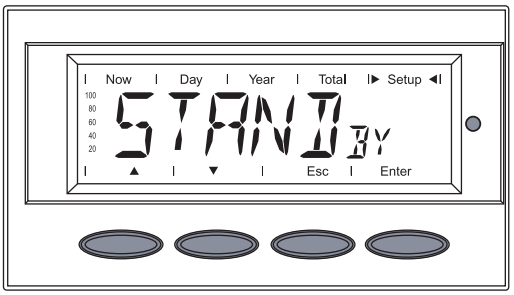

‘STAND BY‘ is displayed.

2 Press the ‘Menu‘ key

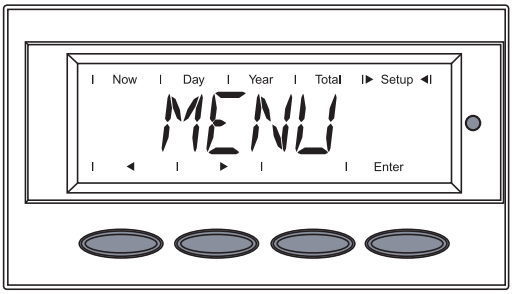

‘MENU‘ is displayed.

3 Select the ‘Setup‘ mode using the ‘Left‘ or ‘Right‘ keys
◀ ▶

4 Press the ‘Enter‘ key

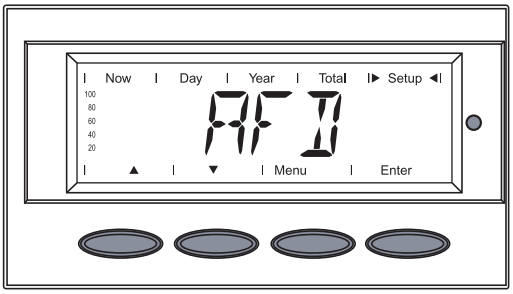

5 Within the setup menu use the ‘Up‘ or ‘Down‘ keys to select the menu item ‘AFD‘

▲ ▼

6 Press the ‘Enter‘ key

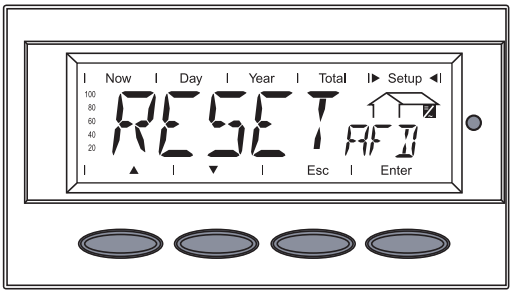

7 Use the ‘Up‘ or ‘Down‘ keys to select ‘RESET AFD‘

▲ ▼

8 Press the ‘Enter‘ key

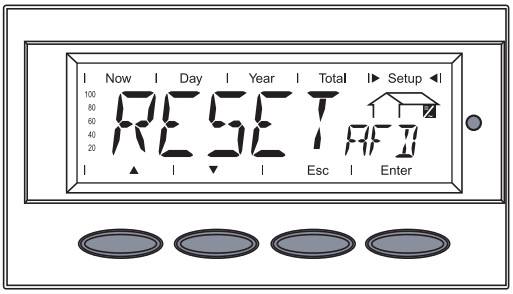

The display alternates between ‘RESET AFD‘ and ‘CONFI RM‘.

9 Press the ‘Enter‘ key within 10 seconds

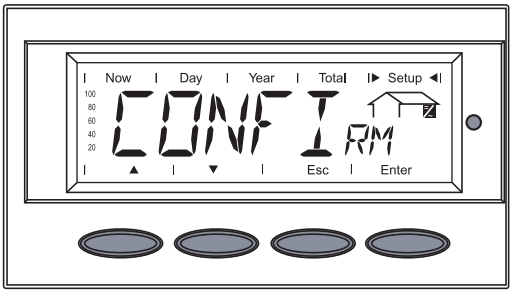

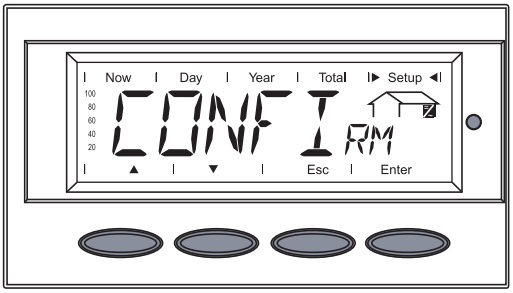

‘CONFI RM‘ is displayed againt.

10 Press the ‘Enter‘ key again

The inverter is reset.

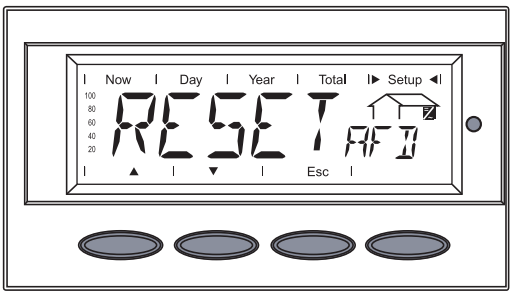

‘RESET AFD‘ without the ‘Enter‘ key is displayed.

NOTE! If an error occurs during resetting the inverter using the display, 'ERROR' and 'RESET AFD‘ are displayed alternately.
In this case, you can return to 'RESET AFD' by pressing the 'Esc' key.

Resetting the inverter after a detected arc using the switch on the Fronius Arc Blocker plug-in card

General

NOTE! Fronius will not accept any costs for loss of production, installation costs, etc., which may arise due to a detected arc and its consequences.
Fronius is not liable for fire that may occur in spite of the integrated arc detection / interruption (e.g. due to a parallel arc).

IMPORTANT! Before the inverter is reset after a detected arc, check all the affected photovoltaic system for damage.

Initial situation

- The Fonius Arc Blocker plug-in card has detected an arc in the inverter.
- The inverter has stopped feeding power into the grid.
- The operating status LED lits up red.
- The state code 240 is shown at the display.

Safety

WARNING! An electric shock can be fatal. Danger from grid voltage and DC voltage from solar modules.
- The connection area should only be opened by a licensed electrician.
- Never work with live wires! Prior to all connection work, make sure that the AC and DC wires are not charged.
- The DC main switch is used only to switch off power to the power stage set. When the DC main switch is turned off, the connection area is still energized.

These servicing instructions are for use by qualified personnel only. To reduce the risk of electric shock, do not perform any servicing other than that specified in the operating instructions.

WARNING! An electric shock can be fatal. Danger from residual voltage from capacitors.

You must wait until the capacitors have discharged. Discharge takes 5 minutes.

Preparation

NOTE! Disconnect AC and DC supply from the inverter.

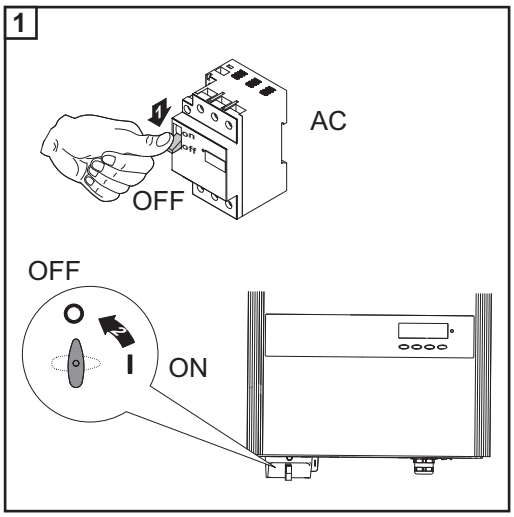

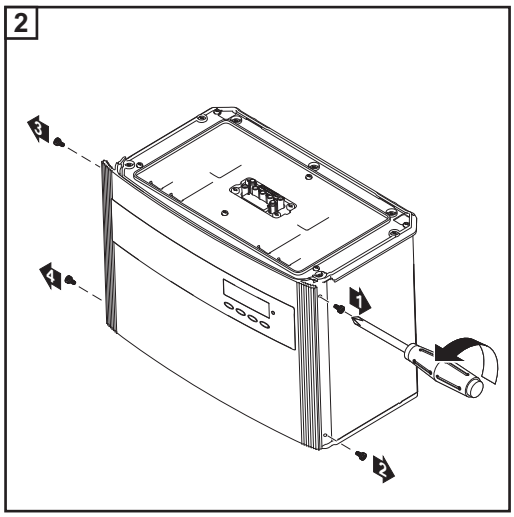

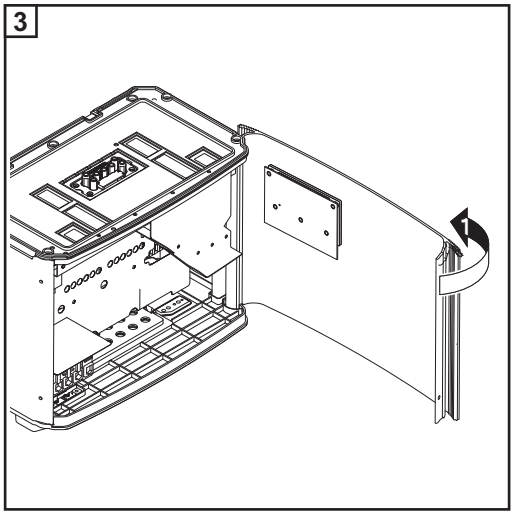

Resetting the inverter after a detected arc using the switch on the Fronius Arc Blocker plug-in card

1. Switch the “Resume“ switch at the Fronius Arc Blocker plug-in card into position - R -
2. Close the inverter
3. Reconnect to AC-side for appr. 10 seconds
4. Disconnect AC-side
5. Open the inverter
6. Switch back the “Resume“ switch to position - O - at the Fronius Arc Blocker plug-in card

Closing the inverter

IMPORTANT! Make sure that the plastic dividers are underneath any data communication wires that are present. .

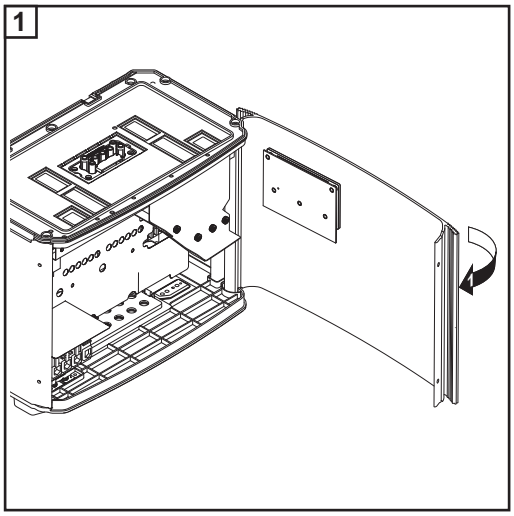

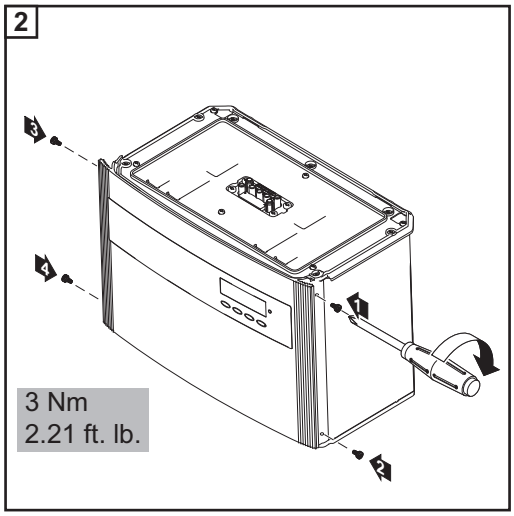

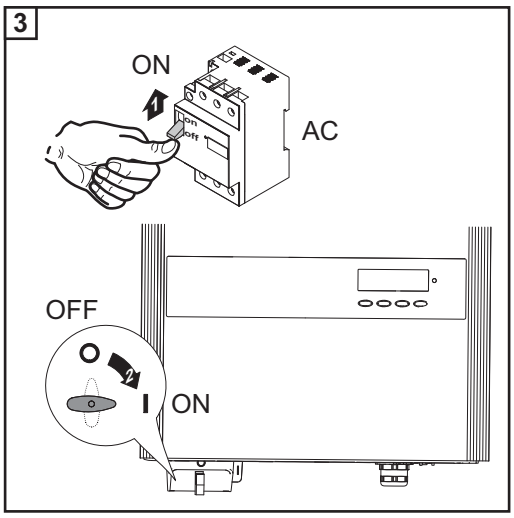

The inverter changes into the startup phase and starts feeding power into the grid again afterwards.
The operation status LED lits up green.

Technical Data

Fronius IG Plus A 3.0-1

Input data

Recommended PV power		2500 - 3450 Wp
MPP voltage range		230 - 500 V DC
Start voltage		260 V
Max. input voltage (at 1000 W/m² / 14 °C in an open circuit)		600 V DC
Nominal input voltage		390 V
Nominal input current		8.3 A
Max. input current		14.0 A
Max. array short circuit current		17.5 A

Output data

Nominal output power (P_{nom})		3000 W
P_{nom} at +122 °F (50 °C)		3000 W
Max. output power		3000 W
Nominal AC output voltage		208 V / 240 V / 277 V
Grid voltage tolerance		+10 / -12 %
Operating AC voltage range default,	at 208 V at 240 V at 277 V	183 - 229 V 211 - 264 V 244 - 305 V
Adjustment range for voltage,	at 208 V at 240 V at 277 V	105 - 248 V 121 - 287 V 140 - 324 V
Voltage trip limit accuracy		1 % of nominal value
Voltage clearing times		0.016 - 4.25 s
Nominal output current	at 208 V at 240 V at 277 V	14.4 A AC 12.5 A AC 10.8 A AC
Number of phases		1
Maximum continuous utility backfeed current *		0 A
Synchronization in-rush current *		0 A
Maximum output fault current / duration		346 A / 3.24 µs
Nominal output frequency		60 Hz
Operating frequency range		59.3 - 60.5 Hz
Adjustment range for frequency		57.0 - 60.48 Hz
Frequency trip limit accuracy		0.05 Hz
Frequency clearing times		0.016 - 300 s
Harmonic distortion		< 3 %
Power factor (at nominal output power)		1 0,85 - 1 ind./cap.**

* assured by electrical design of the inverter

** ind. = inductive; cap. = capacitive

General data

Maximum efficiency		96.2 %
CEC efficiency	at 208 V at 240 V at 277 V	95.0 % 95.5 % 96.0 %
Night consumption		< 1.5 W
Consumption during operation		8 W
Cooling		Controlled forced ventilation
Degree of protection		NEMA 3R
Unit dimensions w x h x d		17.09 x 24.84 x 9.61 in. 434 x 631 x 244 mm
Power stage set weight		31 lbs. 14 kg
Connection area weight		24 lbs. 11 kg
Shipping dimensions w x h x d		20.28 x 31.02 x 14.02 in. 515 x 788 x 356 mm
Shipping weight		59 lbs. 27 kg
Permissible ambient temperature (with 95% rel. humidity)		-13 °F - +131 °F - 25 °C - +55 °C
Permitted storage temperature (with 95% rel. humidity)		-13 °F - +149 °F - 25 °C - +65 °C

Safety equipment

Ground fault protection	internal GFDI (Ground Fault Detector/Interrupter)
Islanding protection	integrated
Protection against reverse polarity	integrated
Arc detection / interruption	integrated
Over temperature	output power derating / active cooling

Fronius IG Plus A 3.8-1

Input data

Recommended PV power	3200 - 4400 Wp
MPP voltage range	230 - 500 V DC
Start voltage	260 V
Max. input voltage (at 1000 W/m² / 14 °C in an open circuit)	600 V DC
Nominal input voltage	390 V
Nominal input current	10.5 A
Max. input current	17.8 A
Max. array short circuit current	22.2 A

Output data

Nominal output power (P_{nom})		3800 W
P_{nom} at +122 °F (50 °C)		3800 W
Max. output power		3800 W
Nominal AC output voltage		208 V / 240 V / 277 V
Grid voltage tolerance		+10 / -12 %
Operating AC voltage range default,	at 208 V at 240 V at 277 V	183 - 229 V 211 - 264 V 244 - 305 V
Adjustment range for voltage,	at 208 V at 240 V at 277 V	105 - 248 V 121 - 287 V 140 - 324 V
Voltage trip limit accuracy		1 % of nominal value
Voltage clearing times		0.016 - 4.25 s
Nominal output current	at 208 V at 240 V at 277 V	18.3 A AC 15.8 A AC 13.7 A AC
Number of phases		1
Maximum continuous utility backfeed current *		0 A
Synchronization in-rush current *		0 A
Maximum output fault current / duration		346 A / 3.24 µs
Nominal output frequency		60 Hz
Operating frequency range		59.3 - 60.5 Hz
Adjustment range for frequency		57.0 - 60.48 Hz
Frequency trip limit accuracy		0.05 Hz
Frequency clearing times		0.016 - 300 s
Harmonic distortion		< 3 %
Power factor (at nominal output power)		1 0,85 - 1 ind./cap.**

* assured by electrical design of the inverter

** ind. = inductive; cap. = capacitive

General data

Maximum efficiency		96.2 %
CEC efficiency	at 208 V at 240 V at 277 V	95.0 % 95.5 % 96.0 %
Night consumption		< 1.5 W
Consumption during operation		8 W
Cooling		Controlled forced ventilation
Degree of protection		NEMA 3R
Unit dimensions w x h x d		17.09 x 24.84 x 9.61 in. 434 x 631 x 244 mm
Power stage set weight		31 lbs. 14 kg
Connection area weight		24 lbs. 11 kg
Shipping dimensions w x h x d		20.28 x 31.02 x 14.02 in. 515 x 788 x 356 mm
Shipping weight		59 lbs. 27 kg
Permissible ambient temperature (with 95% rel. humidity)		-13 °F - +131 °F - 25 °C - +55 °C
Permitted storage temperature (with 95% rel. humidity)		-13 °F - +149 °F - 25 °C - +65 °C

Safety equipment

Ground fault protection	internal GFDI (Ground Fault Detector/Interrupter)
Islanding protection	integrated
Protection against reverse polarity	integrated
Arc detection / interruption	integrated
Over temperature	output power derating / active cooling

Fronius IG Plus A 5.0-1

Input data

Recommended PV power	4250 - 5750 Wp
MPP voltage range	230 - 500 V DC
Start voltage	260 V
Max. input voltage (at 1000 W/m² / 14 °C in an open circuit)	600 V DC
Nominal input voltage	390 V
Nominal input current	13.8 A
Max. input current	23.4 A
Max. array short circuit current	29 A

Output data

Nominal output power (P_{nom})		5000 W
P_{nom} at +122 °F (50 °C)		5000 W
Max. output power		5000 W
Nominal AC output voltage		208 V / 240 V / 277 V
Grid voltage tolerance		+10 / -12 %
Operating AC voltage range default,	at 208 V at 240 V at 277 V	183 - 229 V 211 - 264 V 244 - 305 V
Adjustment range for voltage,	at 208 V at 240 V at 277 V	105 - 248 V 120 - 287 V 140 - 324 V
Voltage trip limit accuracy		1 % of nominal value
Voltage clearing times		0.016 - 4.25 s
Nominal output current	at 208 V at 240 V at 277 V	24.0 A AC 20.8 A AC 18.1 A AC
Number of phases		1
Maximum continuous utility backfeed current *		0 A
Synchronization in-rush current *		0 A
Maximum output fault current / duration		273 A / 72 µs
Nominal output frequency		60 Hz
Operating frequency range		59.3 - 60.5 Hz
Adjustment range for frequency		57.0 - 60.48 Hz
Frequency trip limit accuracy		0.05 Hz
Frequency clearing times		0.016 - 300 s
Harmonic distortion		< 3 %
Power factor (at nominal output power)		1 0,85 - 1 ind./cap.**

* assured by electrical design of the inverter

** ind. = inductive; cap. = capacitive

General data

Maximum efficiency		96.2 %
CEC efficiency	at 208 V at 240 V at 277 V	95.5 % 95.5 % 96.0 %
Night consumption		< 1 W
Consumption during operation		15 W
Cooling		Controlled forced ventilation
Degree of protection		NEMA 3R
Unit dimensions w x h x d		17.09 x 36.46 x 9.61 in. 434 x 926 x 244 mm
Power stage set weight		57 lbs. 26 kg
Connection area weight		26 lbs. 12 kg
Shipping dimensions w x h x d		20.28 x 42.72 x 14.02 in. 515 x 1085 x 356 mm
Shipping weight		90 lbs. 41 kg
Permissible ambient temperature (with 95% rel. humidity)		-13 °F - +131 °F - 25 °C - +55 °C
Permitted storage temperature (with 95% rel. humidity)		-13 °F - +149 °F - 25 °C - +65 °C

Safety equipment

Ground fault protection	internal GFDI (Ground Fault Detector/Interrupter)
Islanding protection	integrated
Protection against reverse polarity	integrated
Arc detection / interruption	integrated
Over temperature	output power derating / active cooling

Fronius IG Plus A 6.0-1

Input data

Recommended PV power	5100 - 6900 Wp
MPP voltage range	230 - 500 V DC
Start voltage	260 V
Max. input voltage (at 1000 W/m² / 14 °C in an open circuit)	600 V DC
Nominal input voltage	390 V
Nominal input current	16.5 A
Max. input current	28.1 A
Max. array short circuit current	35.1 A

Output data

Nominal output power (P_{nom})		6000 W
P_{nom} at +122 °F (50 °C)		6000 W
Max. output power		6000 W
Nominal AC output voltage		208 V / 240 V / 277 V
Grid voltage tolerance		+10 / -12 %
Operating AC voltage range default,	at 208 V at 240 V at 277 V	183 - 229 V 211 - 264 V 244 - 305 V
Adjustment range for voltage,	at 208 V at 240 V at 277 V	105 - 248 V 121 - 287 V 140 - 324 V
Voltage trip limit accuracy		1 % of nominal value
Voltage clearing times		0.016 - 4.25 s
Nominal output current	at 208 V at 240 V at 277 V	28.8 A AC 25.0 A AC 21.7 A AC
Number of phases		1
Maximum continuous utility backfeed current *		0 A
Synchronization in-rush current *		0 A
Maximum output fault current / duration		426 A / 125 µs
Nominal output frequency		60 Hz
Operating frequency range		59.3 - 60.5 Hz
Adjustment range for frequency		57.0 - 60.48 Hz
Frequency trip limit accuracy		0.05 Hz
Frequency clearing times		0.016 - 300 s
Harmonic distortion		< 3 %
Power factor (at nominal output power)		1 0,85 - 1 ind./cap.**

* assured by electrical design of the inverter

** ind. = inductive; cap. = capacitive

General data

Maximum efficiency		96.2 %
CEC efficiency	at 208 V at 240 V at 277 V	95.5 % 96.0 % 96.0 %
Night consumption		< 1.5 W
Consumption during operation		14 W
Cooling		Controlled forced ventilation
Degree of protection		NEMA 3R
Unit dimensions w x h x d		17.09 x 36.46 x 9.61 in. 434 x 926 x 244 mm
Power stage set weight		57 lbs. 26 kg
Connection area weight		26 lbs. 12 kg
Shipping dimensions w x h x d		20.28 x 42.72 x 14.02 in. 515 x 1085 x 356 mm
Shipping weight		90 lbs. 41 kg
Permissible ambient temperature (with 95% rel. humidity)		-13 °F - +131 °F - 25 °C - +55 °C
Permitted storage temperature (with 95% rel. humidity)		-13 °F - +149 °F - 25 °C - +65 °C

Safety equipment

Ground fault protection	internal GFDI (Ground Fault Detector/Interrupter)
Islanding protection	integrated
Protection against reverse polarity	integrated
Arc detection / interruption	integrated
Over temperature	output power derating / active cooling

Fronius IG Plus A 7.5-1

Input data

Recommended PV power	6350 - 8600 Wp
MPP voltage range	230 - 500 V DC
Start voltage	260 V
Max. input voltage (at 1000 W/m² / 14 °C in an open circuit)	600 V DC
Nominal input voltage	390 V
Nominal input current	20.7 A
Max. input current	35.1 A
Max. array short circuit current	43.8 A

Output data

Nominal output power (P_{nom})		7500 W
P_{nom} at +122 °F (50 °C)		7500 W
Max. output power		7500 W
Nominal AC output voltage		208 V / 240 V / 277 V
Grid voltage tolerance		+10 / -12 %
Operating AC voltage range default,	at 208 V at 240 V at 277 V	183 - 229 V 211 - 264 V 244 - 305 V
Adjustment range for voltage,	at 208 V at 240 V at 277 V	105 - 248 V 121 - 287 V 140 - 324 V
Voltage trip limit accuracy		1 % of nominal value
Voltage clearing times		0.016 - 4.25 s
Nominal output current	at 208 V at 240 V at 277 V	36.1 A AC 31.3 A AC 27.1 A AC
Number of phases		1
Maximum continuous utility backfeed current *		0 A
Synchronization in-rush current *		0 A
Maximum output fault current / duration		426 A / 125 µs
Nominal output frequency		60 Hz
Operating frequency range		59.3 - 60.5 Hz
Adjustment range for frequency		57.0 - 60.48 Hz
Frequency trip limit accuracy		0.05 Hz
Frequency clearing times		0.016 - 300 s
Harmonic distortion		< 3 %
Power factor (at nominal output power)		1 0,85 - 1 ind./cap.**

* assured by electrical design of the inverter

** ind. = inductive; cap. = capacitive

General data

Maximum efficiency		96.2 %
CEC efficiency	at 208 V at 240 V at 277 V	95.0 % 95.5 % 96.0 %
Night consumption		< 1.5 W
Consumption during operation		14 W
Cooling		Controlled forced ventilation
Degree of protection		NEMA 3R
Unit dimensions w x h x d		17.09 x 36.46 x 9.61 in. 434 x 926 x 244 mm
Power stage set weight		57 lbs. 26 kg
Connection area weight		26 lbs. 12 kg
Shipping dimensions w x h x d		20.28 x 42.72 x 14.02 in. 515 x 1085 x 356 mm
Shipping weight		90 lbs. 41 kg
Permissible ambient temperature (with 95% rel. humidity)		-13 °F - +131 °F - 25 °C - +55 °C
Permitted storage temperature (with 95% rel. humidity)		-13 °F - +149 °F - 25 °C - +65 °C

Safety equipment

Ground fault protection	internal GFDI (Ground Fault Detector/Interrupter)
Islanding protection	integrated
Protection against reverse polarity	integrated
Arc detection / interruption	integrated
Over temperature	output power derating / active cooling

Fronius IG Plus A 10.0-1

Input data

Recommended PV power	8500 - 11500 Wp
MPP voltage range	230 - 500 V DC
Start voltage	260 V
Max. input voltage (at 1000 W/m² / 14 °C in an open circuit)	600 V DC
Nominal input voltage	390 V
Nominal input current	27.6 A
Max. input current	46.8 A
Max. array short circuit current	58.4 A

Output data

Nominal output power (P_{nom})		9995 W
P_{nom} at +122 °F (50 °C)		9995 W
Max. output power		9995 W
Nominal AC output voltage		208 V / 240 V / 277 V
Grid voltage tolerance		+10 / -12 %
Operating AC voltage range default,	at 208 V at 240 V at 277 V	183 - 229 V 211 - 264 V 244 - 305 V
Adjustment range for voltage,	at 208 V at 240 V at 277 V	105 - 248 V 121 - 287 V 140 - 324 V
Voltage trip limit accuracy		1 % of nominal value
Voltage clearing times		0.016 - 4.25 s
Nominal output current	at 208 V at 240 V at 277 V	48.1 A AC 41.7 A AC 36.1 A AC
Number of phases		1
Maximum continuous utility backfeed current *		0 A
Synchronization in-rush current *		0 A
Maximum output fault current / duration		193 A / 274 µs
Nominal output frequency		60 Hz
Operating frequency range		59.3 - 60.5 Hz
Adjustment range for frequency		57.0 - 60.48 Hz
Frequency trip limit accuracy		0.05 Hz
Frequency clearing times		0.016 - 300 s
Harmonic distortion		< 3 %
Power factor (at nominal output power)		1 0,85 - 1 ind./cap.**

* assured by electrical design of the inverter

** ind. = inductive; cap. = capacitive

General data

Maximum efficiency		96.2 %
CEC efficiency	at 208 V at 240 V at 277 V	95.0 % 95.5 % 96.0 %
Night consumption		< 1.5 W
Consumption during operation		20 W
Cooling		Controlled forced ventilation
Degree of protection		NEMA 3R
Unit dimensions w x h x d		17.09 x 48.07 x 9.61 in. 434 x 1221 x 244 mm
Power stage set weight		82 lbs. 37 kg
Connection area weight		26 lbs. 12 kg
Shipping dimensions w x h x d		20.28 x 42.72 x 14.02 in. + 20.28 x 17.72 x 14.02 in. 515 x 1085 x 356 mm + 515 x 450 x 356 mm
Shipping weight		114 lbs. 52 kg
Permissible ambient temperature (with 95% rel. humidity)		-13 °F - +131 °F - 25 °C - +55 °C
Permitted storage temperature (with 95% rel. humidity)		-13 °F - +149 °F - 25 °C - +65 °C

Safety equipment

Ground fault protection	internal GFDI (Ground Fault Detector/Interrupter)
Islanding protection	integrated
Protection against reverse polarity	integrated
Arc detection / interruption	integrated
Over temperature	output power derating / active cooling

Fronius IG Plus A 10.0-3

Input data

Recommended PV power	8500 - 11500 Wp
MPP voltage range	230 - 500 V DC
Start voltage	260 V
Max. input voltage (at 1000 W/m² / 14 °C in an open circuit)	600 V DC
Nominal input voltage	390 V
Nominal input current	27.6 A
Max. input current	46.7 A
Max. array short circuit current	58.4 A

Output data

Nominal output power (P_{nom})		9995 W
P_{nom} at +122 °F (50 °C)		9995 W
Max. output power		9995 W
Nominal AC output voltage		208 V / 240 V
Grid voltage tolerance		+10 / -12 %
Operating AC voltage range default,	at 208 V at 240 V	183 - 229 V 211 - 264 V
Adjustment range for voltage,	at 208 V at 240 V	105 - 248 V 121 - 287 V
Voltage trip limit accuracy		1 % of nominal value
Voltage clearing times		0.016 - 4.25 s
Nominal output current (per phase)	at 208 V at 240 V	27.7 A AC 24.0 A AC
Number of phases		3
Maximum continuous utility backfeed current *		0 A
Synchronization in-rush current *		0 A
Maximum output fault current / duration		324 A / 1.16 ms
Nominal output frequency		60 Hz
Operating frequency range		59.3 - 60.5 Hz
Adjustment range for frequency		57.0 - 60.48 Hz
Frequency trip limit accuracy		0.05 Hz
Frequency clearing times		0.016 - 300 s
Harmonic distortion		< 3 %
Power factor (at nominal output power)		1 0,85 - 1 ind./cap.**

* assured by electrical design of the inverter

** ind. = inductive; cap. = capacitive

General data

Maximum efficiency		96.2 %
CEC efficiency	at 208 V at 240 V	95.0 % 95.5 %
Night consumption		< 1.5 W
Consumption during operation		20 W
Cooling		Controlled forced ventilation
Degree of protection		NEMA 3R
Unit dimensions w x h x d		48.07 x 17.09 x 9.61 in. 1221 x 434 x 244 mm
Power stage set weight		82 lbs. 37 kg
Connection area weight		26 lbs. 12 kg
Shipping dimensions w x h x d		42.72 x 20.28 x 14.02 in. + 17.72 x 20.28 x 14.02 in. 1085 x 515 x 356 mm + 450 x 515 x 356 mm
Shipping weight		114 lbs. 52 kg
Permissible ambient temperature (with 95% rel. humidity)		-13 °F - +131 °F - 25 °C - +55 °C
Permitted storage temperature (with 95% rel. humidity)		-13 °F - +149 °F - 25 °C - +65 °C

Safety equipment

Ground fault protection	internal GFDI (Ground Fault Detector/Interrupter)
Islanding protection	integrated
Protection against reverse polarity	integrated
Arc detection / interruption	integrated
Over temperature	output power derating / active cooling

Fronius IG Plus A 11.4-1

Input data

Recommended PV power	9700 - 13100 Wp
MPP voltage range	230 - 500 V DC
Start voltage	260 V
Max. input voltage (at 1000 W/m² / 14 °C in an open circuit)	600 V DC
Nominal input voltage	390 V
Nominal input current	31.4 A
Max. input current	53.3 A
Max. array short circuit current	66.6 A

Output data

Nominal output power (P_{nom})		11400 W
P_{nom} at +122 °F (50 °C)		11400 W
Max. output power		11400 W
Nominal AC output voltage		208 V / 240 V / 277 V
Grid voltage tolerance		+10 / -12 %
Operating AC voltage range default,	at 208 V at 240 V at 277 V	183 - 229 V 211 - 264 V 244 - 305 V
Adjustment range for voltage,	at 208 V at 240 V at 277 V	105 - 248 V 121 - 287 V 140 - 324 V
Voltage trip limit accuracy		1 % of nominal value
Voltage clearing times		0.016 - 4.25 s
Nominal output current	at 208 V at 240 V at 277 V	54.8 A AC 47.5 A AC 41.2 A AC
Number of phases		1
Maximum continuous utility backfeed current *		0 A
Synchronization in-rush current *		0 A
Maximum output fault current / duration		193 A / 274 µs
Nominal output frequency		60 Hz
Operating frequency range		59.3 - 60.5 Hz
Adjustment range for frequency		57.0 - 60.48 Hz
Frequency trip limit accuracy		0.05 Hz
Frequency clearing times		0.016 - 300 s
Harmonic distortion		< 3 %
Power factor (at nominal output power)		1 0,85 - 1 ind./cap.**

* assured by electrical design of the inverter

** ind. = inductive; cap. = capacitive

General data

Maximum efficiency		96.2 %
CEC efficiency	at 208 V at 240 V at 277 V	95.0 % 95.5 % 96.0 %
Night consumption		< 1.5 W
Consumption during operation		20 W
Cooling		Controlled forced ventilation
Degree of protection		NEMA 3R
Unit dimensions w x h x d		17.09 x 48.07 x 9.61 in. 434 x 1221 x 244 mm
Power stage set weight		82 lbs. 37 kg
Connection area weight		26 lbs. 12 kg
Shipping dimensions w x h x d		20.28 x 42.72 x 14.02 in. + 20.28 x 17.72 x 14.02 in. 515 x 1085 x 356 mm + 515 x 450 x 356 mm
Shipping weight		114 lbs. 52 kg
Permissible ambient temperature (with 95% rel. humidity)		-13 °F - +131 °F - 25 °C - +55 °C
Permitted storage temperature (with 95% rel. humidity)		-13 °F - +149 °F - 25 °C - +65 °C

Safety equipment

Ground fault protection	internal GFDI (Ground Fault Detector/Interrupter)
Islanding protection	integrated
Protection against reverse polarity	integrated
Arc detection / interruption	integrated
Over temperature	output power derating / active cooling

Fronius IG Plus A 11.4-3

Input data

Recommended PV power	9700 - 13100 Wp
MPP voltage range	230 - 500 V DC
Start voltage	260 V
Max. input voltage (at 1000 W/m² / 14 °C in an open circuit)	600 V DC
Nominal input voltage	390 V
Nominal input current	31.4 A
Max. input current	53.3 A
Max. array short circuit current	66.6 A

Output data

Nominal output power (P_{nom})		11400 W
P_{nom} at +122 °F (50 °C)		11400 W
Max. output power		11400 W
Nominal AC output voltage		208 V / 240 V
Grid voltage tolerance		+10 / -12 %
Operating AC voltage range default,	at 208 V at 240 V	183 - 229 V 211 - 264 V
Adjustment range for voltage,	at 208 V at 240 V	105 - 248 V 121 - 287 V
Voltage trip limit accuracy		1 % of nominal value
Voltage clearing times		0.016 - 4.25 s
Nominal output current	at 208 V at 240 V	31.6 A AC 27.4 A AC
Number of phases		3
Maximum continuous utility backfeed current *		0 A
Synchronization in-rush current *		0 A
Maximum output fault current / duration		324 A / 1.16 ms
Nominal output frequency		60 Hz
Operating frequency range		59.3 - 60.5 Hz
Adjustment range for frequency		57.0 - 60.48 Hz
Frequency trip limit accuracy		0.05 Hz
Frequency clearing times		0.016 - 300 s
Harmonic distortion		< 3 %
Power factor (at nominal output power)		1 0,85 - 1 ind./cap.**

* assured by electrical design of the inverter

** ind. = inductive; cap. = capacitive

General data

Maximum efficiency		96.2 %
CEC efficiency	at 208 V at 240 V	95.0 % 96.0 %
Night consumption		< 1.5 W
Consumption during operation		20 W
Cooling		Controlled forced ventilation
Degree of protection		NEMA 3R
Unit dimensions w x h x d		17.09 x 48.07 x 9.61 in. 434 x 1221 x 244 mm
Power stage set weight		82 lbs. 37 kg
Connection area weight		26 lbs. 12 kg
Shipping dimensions w x h x d		20.28 x 42.72 x 14.02 in. + 20.28 x 17.72 x 14.02 in. 515 x 1085 x 356 mm + 515 x 450 x 356 mm
Shipping weight		114 lbs. 52 kg
Permissible ambient temperature (with 95% rel. humidity)		-13 °F - +131 °F - 25 °C - +55 °C
Permitted storage temperature (with 95% rel. humidity)		-13 °F - +149 °F - 25 °C - +65 °C

Safety equipment

Ground fault protection	internal GFDI (Ground Fault Detector/Interrupter)
Islanding protection	integrated
Protection against reverse polarity	integrated
Arc detection / interruption	integrated
Over temperature	output power derating / active cooling

Fronius IG Plus A 12.0-3

Input data

Recommended PV power	10200 - 13800 Wp
MPP voltage range	230 - 500 V DC
Start voltage	260 V
Max. input voltage (at 1000 W/m² / 14 °C in an open circuit)	600 V DC
Nominal input voltage	390 V
Nominal input current	33.1 A
Max. input current	56.1 A
Max. array short circuit current	70.1 A

Output data

Nominal output power (P_{nom})		12000 W
P_{nom} at +122 °F (50 °C)		12000 W
Max. output power		12000 W
Nominal AC output voltage		277 V
Grid voltage tolerance		+10 / -12 %
Operating AC voltage range default,	at 277 V	244 - 305 V
Adjustment range for voltage,	at 277 V	140 - 324 V
Voltage trip limit accuracy		1 % of nominal value
Voltage clearing times		0.016 - 4.25 s
Nominal output current	at 277 V	14.4 A AC
Number of phases		3
Maximum continuous utility backfeed current *		0 A
Synchronization in-rush current *		0 A
Maximum output fault current / duration		504 A / 30.26 µs
Nominal output frequency		60 Hz
Operating frequency range		59.3 - 60.5 Hz
Adjustment range for frequency		57.0 - 60.48 Hz
Frequency trip limit accuracy		0.05 Hz
Frequency clearing times		0.016 - 300 s
Harmonic distortion		< 3 %
Power factor (at nominal output power)		1 0,85 - 1 ind./cap.**

* assured by electrical design of the inverter

** ind. = inductive; cap. = capacitive

General data

Maximum efficiency		96.2 %
CEC efficiency	at 277 V	96.0 %
Night consumption		< 1.5 W
Consumption during operation		20 W
Cooling		Controlled forced ventilation
Degree of protection		NEMA 3R
Unit dimensions w x h x d		48.07 x 17.09 x 9.61 in. 1221 x 434 x 244 mm
Power stage set weight		82 lbs. 37 kg
Connection area weight		26 lbs. 12 kg
Shipping dimensions w x h x d		42.72 x 20.28 x 14.02 in. + 17.72 x 20.28 x 14.02 in. 1085 x 515 x 356 mm + 450 x 515 x 356 mm
Shipping weight		114 lbs. 52 kg
Permissible ambient temperature (with 95% rel. humidity)		-13 °F - +131 °F - 25 °C - +55 °C
Permitted storage temperature (with 95% rel. humidity)		-13 °F - +149 °F - 25 °C - +65 °C

Safety equipment

Ground fault protection	internal GFDI (Ground Fault Detector/Interrupter)
Islanding protection	integrated
Protection against reverse polarity	integrated
Arc detection / interruption	integrated
Over temperature	output power derating / active cooling

Field adjustable trip points

Field adjustable trip points	208 V	240 V	277 V
Nominal AC output voltage, Line-to-Line, [V]	208	240	277
Operating AC voltage range default, Line-to-Line, [V]	183-229	211-264	-
Adjustment range for voltage, Line-to-Line, [V]	105-248	121-287	-
Voltage trip limit accuracy Line-to-Line, [% of nominal value]	1	1	-
Operating AC voltage range default, Line-to-Neutral, [V]	106-132	106-132	244-305
Adjustment range for voltage, Line-to-Neutral, [V]	61-143	61-143	138-324
Adjustment range for voltage clearing time [s]	0.016-4.25	0.016-4.25	0.016-4.25
Voltage trip limit accuracy Line-to-Neutral, [% of nominal value]	1	1	1
Nominal output frequency [Hz]	60	60	60
Operating frequency range [Hz]	59.3-60.5	59.3-60.5	59.3-60.5
Adjustment range for frequency [Hz]	57.0-60.48	57.0-60.48	57.0-60.48
Adjustment range for frequency clearing time [s]	0.016-300	0.016-300	0.016-300
Frequency trip limit accuracy [ms]	16.66 (1)	16.66 (1)	16.66 (1)
Detection time [ms]	25 (2)	25 (2)	25 (2)
Reconnect time default [s]	300	300	300
Adjustment range for reconnect time [s]	5-900	5-900	5-900

(1) 16.66 ms are equivalent to 1 cycle

(2) 25 ms are equivalent to 1.5 cycles

Relevant Standards and Directives

Relevant standards and directives

- UL 1741
- IEEE 1547
- IEEE 1547.1
- ANSI/IEEE C62.41
- UL 1699B Issue 2-2013
- FCC Teil 15 A & B
- NEC Article 690
- C22. 2 No. 107.1-01 (September 2001)

Grid Failure

The standard measurement and safety procedures integrated into the inverter ensure that the power feed is immediately interrupted in the event of a grid failure (shut-off by the utility or damage to lines).

Warranty and Disposal

FRONIUS USA limited 10-year warranty

At Fronius, we have been designing and manufacturing high quality power electronics equipment for over 60 years. And all our production facilities are ISO 9001 certified.

You will probably not encounter any service-related issues with your Fronius IG Plus Solar Inverter.
However, in the unlikely event that within Ten (10) years from the original purchase you discover a problem caused by defects in either workmanship or materials, we will see that the device is either repaired or replaced.
Repair or replacement depends on Fronius's evaluation of the issue and what we decide makes the most sense according to the situation.
The warranty is based on the inverter's serial number, allowing the warranty to be transferred to another owner if the Fronius IG Plus solar inverter remains installed in the original installation location. Because the warranty is tied to the serial number, there is no paperwork to transfer the warranty to a new owner.

The Fronius IG Plus Solar Inverters are designed to withstand normal operating conditions and typical wear and tear when the Fronius IG Plus Solar Inverter is used for its original intent, in compliance with the Fronius IG Plus Installation and Operational Manual(s) supplied with the original equipment.
This warranty does not cover damages by improper installation or operation, misuse, abuse, manipulation, alterations or repair attempts, accidents, fire, floods, acts of God, and incidental or consequential damage caused by defects with other components of the solar system. This warranty does not extend beyond the original cost of the Fronius IG Plus Solar Inverter.

Policy and procedure for warranty returns and repairs

To obtain service you must follow this policy and procedure for warranty returns and repairs:

- All returned Fronius IG Plus Solar Inverters require a Returned Merchandise Authorization Number (RMA).
- A request for an RMA number requires the following information:
  - Proof of purchase in the form of the original invoice
  - Model number of the Fronius IG Plus solar inverter
  - Serial number of the Fronius IG Plus inverter
  - Description of the problem
  - Shipping address for the repaired or replaced equipment
- All Fronius IG Plus solar inverters authorized for return by FRONIUS USA must be returned in their original shipping container or packaging providing equal protection.
- Shipping costs to FRONIUS USA and back to the purchaser of repaired or replacement Fronius IG Plus Solar Inverters is the responsibility of FRONIUS USA
- The warranty period of any repaired or replacement inverter is 12 months after shipment from FRONIUS USA or the original warranty period which ever is later
- Labor costs related to uninstalling the defective equipment and re-installing the repaired or replacement equipment are not covered under the warranty.

Some states do not allow the exclusion or limitation of incidental or consequential damages. This warranty gives you specific legal rights, and you may also have other rights, which vary from state to state.

FRONIUS USA LLC General Terms and Conditions apply.

Contact your local dealer or FRONIUS Service Partner for immediate handling of warranty issues. For service assistance to resolve a Fronius IG Plus solar inverter problem, or for product information please contact:

Fronius USA LLC - Solar Electronics Division
6797 Fronius Drive, Portage, IN 46368
E-Mail: pv-us@fronius.com
http://www.fronius-usa.com

Disclaimer

Damages claims against Fronius are excluded unless they are based on gross negligence or willful intent on the part of Fronius.

The installer and the operator shall comply with the safety rules given by Fronius and regional applicable guidelines, standards, and regulations in connection with work on photovoltaic systems. The safety rules can be found in the operating instructions provided upon delivery. The installer as well as the operator are fully liable for damages and costs which arise due to noncompliance of this provision.

This Fronius product has an internal Arc Fault Circuit Interrupter (AFCI) Type 1. This component detects and separates serial arcs in your PV system, thus meeting the requirements of standard UL1699B Outline of Investigation for Photovoltaic (PV) DC Arc Fault Circuit Protection (Issue Number 2, January 14, 2013). In addition, Fronius accepts no liability for damages that may result from the occurrence of arcs. Claims against Fronius due to reduced yield or yield loss during the time the inverter is shut down by the AFCI are excluded. Costs that may arise due to inverter being shut down by the AFCI shall be borne by the operator.

Disposal

Should your inverter be replaced at some future date, Fronius will accept the obsolete equipment back and provide for its proper recycling.

Certificate of Compliance

Certificate:	2308317	**Master Contract:**	203213
Project:	2650312	**Date Issued:**	August 16, 2013

Issued to: **Fronius International GmbH**

Guenter Fronius Strasse 1
Wels-Thalheim, 4600
Austria
Attention: Christian Ing. Lehner

The products listed below are eligible to bear the CSA Mark shown with adjacent indicators 'C' and 'US' for Canada and US or with adjacent indicator 'US' for US only or without either indicator for Canada only.

C US

Rob Hempstock

Issued by: Rob Hempstock, AScT.

PRODUCTS

CLASS 5311 09 - POWER SUPPLIES - Distributed Generation Power Systems Equipment
CLASS 5311 89 - POWER SUPPLIES - Distributed Generation - Power Systems Equipment
- Certified to U.S. Standards

Utility Interactive Inverter, Models Fronius IG Plus V 3.0-1 UNI, Fronius IG Plus A 3.0-1 UNI, Fronius IG Plus V 3.8-1 UNI, Fronius IG Plus A 3.8-1 UNI, SPR-3301f-1 UNI, SPR-3301f-A-1 UNI, SPR-3801f-1 UNI, SPR-3801f-A-1 UNI, Fronius IG Plus V 5.0-1 UNI, Fronius IG Plus A 5.0-1 UNI, Fronius IG Plus V 6.0-1 UNI, Fronius IG Plus A 6.0-1 UNI, Fronius IG Plus V 7.5-1 UNI, Fronius IG Plus A 7.5-1 UNI, SPR-6501f-1 UNI, SPR-6501f-A-1 UNI, SPR-7501f-1 UNI, SPR-7501f-A-1 UNI, SPR-10001f-1 UNI, SPR-10001f-A-1 UNI, Fronius IG Plus V 10.0-1 UNI, Fronius IG Plus A 10.0-1 UNI, Fronius IG Plus V 11.4-1 UNI, Fronius IG Plus A 11.4-1 UNI, SPR-11401f-1 UNI, SPR-11401f-A-1 UNI, Fronius IG Plus V 12.0-3 WYE277, Fronius IG Plus A 12.0-3 WYE277, Fronius IG Plus V 11.4-3 Delta, Fronius IG Plus A 11.4-3 Delta, Fronius IG Plus V 10.0-3 Delta, Fronius IG Plus A 10.0-3 Delta, SPR-11401f-3 208/240 Delta, SPR-11401f-A-3 208/240 Delta, SPR-12001f-3-277WYE and SPR-12001f-A-3-277WYE, permanently connected.

For details related to model ratings, reference should be made to the CSA Certification Record, Attachment 1 (Ratings), or the Descriptive Report.

CSA Group

Certificate:	2308317	**Master Contract:**	203213
Project:	2650312	**Date Issued:**	August 16, 2013

Notes:

1. Inverter models, Fronius IG Plus V 3.0-1 UNI, Fronius IG Plus A 3.0-1 UNI, Fronius IG Plus V 3.8-1 UNI, Fronius IG Plus A 3.8-1 UNI, SPR-3301f-1 UNI, SPR-3301f-A-1 UNI, SPR-3801f-1 UNI, SPR-3801f-A-1 UNI, Fronius IG Plus V 5.0-1 UNI, Fronius IG Plus A 5.0-1 UNI, Fronius IG Plus V 6.0-1 UNI, Fronius IG Plus A 6.0-1 UNI, Fronius IG Plus V 7.5-1 UNI, Fronius IG Plus A 7.5-1 UNI, SPR-6501f-1 UNI, SPR-6501f-A-1 UNI, SPR-7501f-1 UNI, SPR-7501f-A-1 UNI, SPR-10001f-1 UNI, SPR-10001f-A-1 UNI, Fronius IG Plus V 10.0-1 UNI, Fronius IG Plus A 10.0-1 UNI, Fronius IG Plus V 11.4-1 UNI, Fronius IG Plus A 11.4-1 UNI, SPR-11401f-1 UNI, SPR-11401f-A-1 UNI, Fronius IG Plus V 12.0-3 WYE277, Fronius IG Plus A 12.0-3 WYE277, Fronius IG Plus V 11.4-3 Delta, Fronius IG Plus A 11.4-3 Delta, Fronius IG Plus V 10.0-3 Delta, Fronius IG Plus A 10.0-3 Delta, SPR-11401f-3 208/240 Delta, SPR-11401f-A-3 208/240 Delta, SPR-12001f-3-277WYE and SPR-12001f-A-3-277WYE have been evaluated for use in utility-interactive applications. Inverters using these same model numbers and identical in construction but without the CBox are approved for field replacement use only, and are not to be offered for sale by Fronius; the replacement unit will be re-assembled onto the existing CBox in the end installation so that a CBox is always present on any installed system.

2. All models meet the surge requirements of IEEE C62.41.2-2002, Location Category B (6kV). Tests were performed using ring wave and combination waveforms, both polarities, for common mode and differential mode coupling, 20 pulses each test. After surge testing the units were operational with control functionally verified by frequency and voltage disconnect tests.

3. 'A' series inverter models are provided with integral PV DC ARC-Fault Circuit Protection for series arcing faults.

APPLICABLE REQUIREMENTS

CSA C22.2 No 107.1-01 - General Use Power Supplies

*UL Std. No. 1741-Second Edition - Inverters, Converters, Controllers and Interconnection System Equipment for Use With Distributed Energy Resources (January 28, 2010)

UL 1699B - Outline of Investigation for Photovoltaic (PV) DC Arc-Fault Circuit Protection (Issue Number 2, January 14, 2013)

CSA TIL M-07 - Interim Certification Requirements for Photovoltaic (PV) DC Arc Fault Protection (Issue Number 1, March 11, 2013)

*Note: Conformity to UL 1741-Second Edition (January 28, 2010) includes compliance with applicable requirements of IEEE 1547 and IEEE 1547.1

Letter of Attestation

Document:	2361219	**Master Contract:**	203213
Project:	2594468	**Date Issued:**	March 18, 2013
Issued to:	**Fronius International GmbH** **Guenter Fronius Strasse 1** **Wels-Thalheim, 4600** **Austria**		

CSA Group, Certification and Testing hereby confirms that it has completed an evaluation of Inverter Integral 5% Meter Performance for the following Utility Interactive Photovoltaic Inverters:

Models IG 2000 NEG, IG 2000 POS, IG 3000 NEG, IG 3000 POS, IG 2500-LV NEG, and IG 2500-LV POS, IG 4000 NEG, IG 4000 POS, IG 5100 NEG, IG 5100 POS, IG 4500-LV NEG, and IG 4500-LV POS.

Models Fronius IG Plus 3.0-1 UNI, Fronius IG Plus 3.8-1 UNI, SunPower SPR-3300f, SunPower SPR-4000f, Fronius IG Plus 5.0-1 UNI, Fronius IG Plus 6.0-1 UNI, Fronius IG Plus 7.5-1 UNI, SunPower SPR-6500f, SunPower SPR-8000f, Fronius IG Plus 10.0-1 UNI, Fronius IG Plus 11.4-1 UNI, Fronius IG Plus 12.0-3 WYE277, Fronius IG Plus 11.4-3 Delta and SunPower SPR-12000f.

Models Fronius IG Plus V 3.0-1 UNI, Fronius IG Plus A 3.0-1 UNI, Fronius IG Plus V 3.8-1 UNI, Fronius IG Plus A 3.8-1 UNI, SPR-3301f-1 UNI, SPR-3301f-A-1 UNI, SPR-3801f-1 UNI, SPR-3801f-A-1 UNI, Fronius IG Plus V 5.0-1 UNI, Fronius IG Plus A 5.0-1 UNI, Fronius IG Plus V 6.0-1 UNI, Fronius IG Plus A 6.0-1 UNI, Fronius IG Plus V 7.5-1 UNI, Fronius IG Plus A 7.5-1 UNI, SPR-6501f-1 UNI, SPR-6501f-A-1 UNI, SPR-7501f-1 UNI, SPR-7501f-A-1 UNI, SPR-10001f-1 UNI, SPR-10001f-A-1 UNI, Fronius IG Plus V 10.0-1 UNI, Fronius IG Plus A 10.0-1 UNI, Fronius IG Plus V 11.4-1 UNI, Fronius IG Plus A 11.4-1 UNI, SPR-11401f-1 UNI, SPR-11401f-A-1 UNI, Fronius IG Plus V 12.0-3 WYE277, Fronius IG Plus A 12.0-3 WYE277, Fronius IG Plus V 11.4-3 Delta, Fronius IG Plus A 11.4-3 Delta, SPR-11401f-3 208/240 Delta, SPR-11401f-A-3 208/240 Delta, SPR-12001f-3-277WYE and SPR-12001f-A-3-277WYE.

Models Fronius CL 33.3 Delta, Fronius CL 44.4 Delta, Fronius CL 55.5 Delta, Fronius CL 36.0 WYE277, Fronius CL 48.0 WYE277 and Fronius CL 60.0 WYE277.

CSA Group, Certification and Testing hereby attests that the product identified above and described in CSA reports 1878274, 2065918, 2308317, and 2308316 complies with the following standards/tests, to the extent applicable:

CSA Group

Certificate: 2361219 **Master Contract:** 203213
Project: 2594468 **Date:** March 18, 2013

The testing of the subject inverters were completed according to the following sections of the California Public Utilities Commission California Solar Initiative Program Handbook, June 2010, entitled Appendix C: Inverter Integral 5% Meter Performance Specification and Test Requirements.

- ***Test 1: No Load Test***
- ***Test 2: Load Performance Test***
- ***Test 3: Effect of Variation of Voltage***
- ***Test 4: Effect of Variation of Frequency***
- ***Test 5: Effect of Internal Heating***
- ***Test 6: Stability of Performance (Self Certified by Client)***
- ***Test 7: Independence of Elements***
- ***Test 8: Insulation***
- ***Test 9a: Voltage Interruptions from Short Circuits***
- ***Test 9b: Voltage Interruptions from Loss of Control***
- ***Test 10: Effect of High Voltage Line Surges***
- ***Test 11: Effect of Variation of Ambient Temperature***
- ***Test 12: Electrical Fast/Transient Burst***
- ***Test 13: Effect of electrical oscillatory Surge Withstand Capabilities (SWC) Test***
- ***Test 14: Effect of Radio Frequency Interference (N/A, meets FCC Part 15 Compliance)***
- ***Test 15: Effect of Frequency Conducted and Radiated Emission (N/A, meets FCC Part 15 Compliance)***
- ***Test 16: Effect of Electrostatic Discharge (ESD)***
- ***Test 17: Effect of Operating Temperature***
- ***Test 18: Effect of Relative Humidity***

Notes:

1. For summary of test set up and test results refer to CSI Meter Attestation Report and Appendix A.
2. The above inverter models are CSA Certified to Standard UL1741 2nd Edition and are currently listed on the CEC Eligible Inverter Listings.

Issued by:

Rob Hempstock, AScT

THIS LETTER OF ATTESTATION DOES NOT AUTHORIZE THE USE OF THE CSA MARK ON THE SUBJECT PRODUCTS.
QUOTATIONS FROM THE TEST REPORT OR THE USE OF THE NAME OF THE CANADIAN STANDARDS ASSOCIATION AND CSA GROUP OR ITS REGISTERED TRADEMARK, IN ANY WAY, IS NOT PERMITTED WITHOUT PRIOR WRITTEN CONSENT OF THE CANADIAN STANDARDS ASSOCIATION OPERATING AS CSA GROUP, CERTIFICATION AND TESTING DIVISION.

Fronius Worldwide - www.fronius.com/addresses

Fronius International GmbH
4600 Wels, Froniusplatz 1, Austria
E-Mail: pv-sales@fronius.com
http://www.fronius.com

Fronius USA LLC Solar Electronics Division
6797 Fronius Drive, Portage, IN 46368
E-Mail: pv-us@fronius.com
http://www.fronius-usa.com

Under http://www.fronius.com/addresses you will find all addresses of our sales branches and partner firms!